CS-400F
CHAIN SAW

Instruction Manual

⚠ WARNING

Burn Hazard

The muffler or catalytic muffler and surrounding cover may become extremely hot. Always keep clear of exhaust and muffler area, otherwise serious personal injury may occur.

⚠ WARNING

The engine exhaust from this product contains chemicals known to the State of California to cause cancer, birth defects or other reproductive harm.

⚠ WARNING

Users of this equipment risk injury to themselves and others if the unit is used improperly and/or safety precautions are not followed. ECHO provides an operator's manual and a safety manual. Both must be read and understood for proper and safe operation. Failure to do so could result in serious injury.

Specifications, descriptions and illustrative material in this literature are as accurate as known at the time of publication, but are subject to change without notice. Illustrations may include optional equipment and accessories, and may not include all standard equipment.

X7503256100

© 2/2017 ECHO Inc.

TABLE OF CONTENTS

Table of Contents 2
Contents 3
Safety 4
- Rules For Safe Operation 4
- Correct Use Of Chain Brake 5
- Personal Condition and Safety Equipment 8
- Symbols and Signs 11
- Manual Safety Symbols and Important Information 12

Emission Control (Exhaust / Evaporative) 12
- CARB And EPA Emissions Control Information 12

Description 13
- Preparation For Use 15

Operation 17
- Fuel 17
- Chain Lubricant 19
- Winter Operation 20
- Starting Cold Engine 20
- Starting Warm Engine 21
- Running 22
- Stopping 22
- Checking Chain Tension 22
- Chain Lubrication Test 23
- Cutting Instructions 23
- Chain And Guide Bar Combination 26
- Guide Bar 27
- Saw Chain 27

Maintenance 27
- Skill Levels 27
- Maintenance Intervals 28
- Carburetor Adjustment 28
- Air Filter 29
- Spark Plug 30
- Check Fuel System 30
- Fuel Filter 30
- Automatic Oiler 30
- Oil Filter 31
- Guide Bar 31
- Sprocket 31
- Cooling System Cleaning 31
- Spark Arrestor Muffler 31
- Spark Arrestor Screen 32
- Exhaust Port Cleaning 32
- Setting The Saw Chain 33

Troubleshooting 35
Storage 36
- Storage After Use 36

Technical Data 38
Warranty Statements 39
Product Registration 41
Notes 42
Servicing Information 43
- Parts/Serial Number 43
- Service 43
- Echo Consumer Product Support 43
- Product Registration 43
- Additional or Replacement Manuals 43

© 2/2017 ECHO Inc.

CONTENTS

The ECHO product you purchased has been factory pre-assembled for your convenience. Due to packaging restrictions, some assembly may be necessary.

After opening the carton, check for damage. Immediately notify your retailer or ECHO Dealer of damaged or missing parts. Use the contents list to check for missing parts.

_____ 1 - Power Head

_____ 1 - Instruction manual

_____ 1 - Safety Manual

_____ 1 - Emission Control Warranty Statement

_____ 1 - Echo Power Blend X™ 2-Stroke Oil Sample

_____ 1 - Guide bar

_____ 1 - Saw chain

_____ 1 - Tip Guard Assembly

© 2/2017 ECHO Inc.

SAFETY

Rules For Safe Operation

Kickback Safety Precautions for Chain Saw Users

For more information scan this QR code.

⚠ WARNING

KICKBACK may occur when the nose or tip of the guide bar touches an object, or when the wood closes in and pinches the saw chain in the cut.

Tip contact in some cases may cause a lightning fast reverse REACTION, Kicking the guide bar up and back towards the operator. Pinching the saw chain along the top of the guide bar may push the guide bar rapidly back towards the operator. Either of these reactions may cause you to lose control of the saw which could result in serious personal injury.

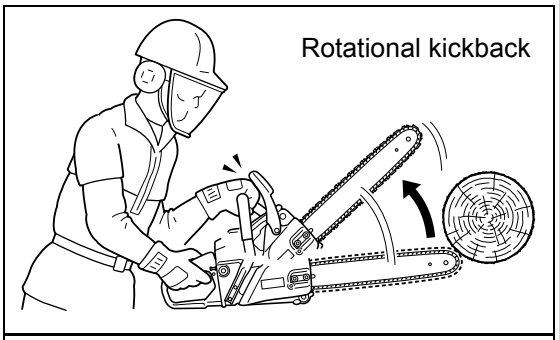

The tip guard device is not installed on the guide bar when you purchase your chain saw. The tip guard can be used in a majority of cutting operations, and is especially recommended for beginners, homeowners, or chain saw novices. Most cutting operations can be accomplished with the tip guard in place.

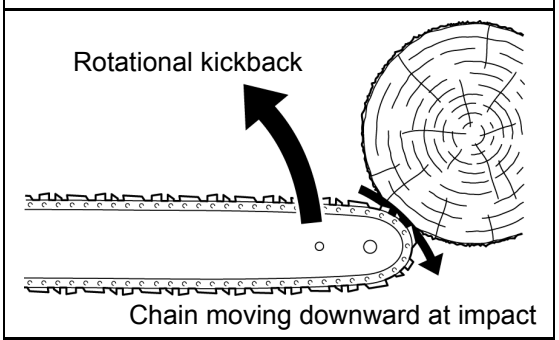

Do not rely exclusively upon the safety devices built into your saw. As a chain saw user, you should take several steps to keep your cutting jobs free from accident or injury.

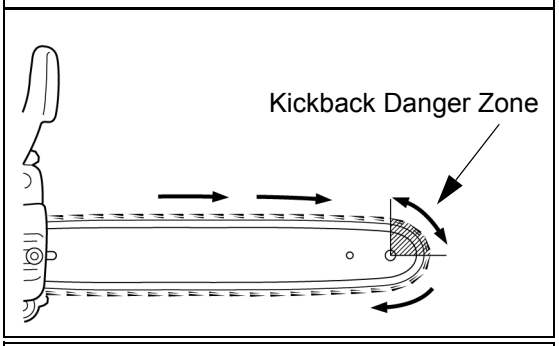

1. With a basic understanding of kickback, you can reduce or eliminate the element of surprise. Sudden surprise contributes to accidents.
2. Keep a good firm grip on the saw with both hands, the right hand on the rear handle, and the left hand on the front handle, when the engine is running. Use a firm grip with thumbs and fingers encircling the chain saw handles. A firm grip will help you reduce kickback and maintain control of the saw. Don't let go.
3. Make sure that the area in which you are cutting is free from obstructions. Do not let the nose of the guide bar contact a log, branch, or any other obstruction which could be hit while you are operating the saw.
4. Cut at high engine speeds.
5. Do not overreach or cut above shoulder height.
6. Follow manufacturer's sharpening and maintenance instructions for the saw chain.
7. Only use replacement bars and chains specified by the manufacturer or the equivalent.

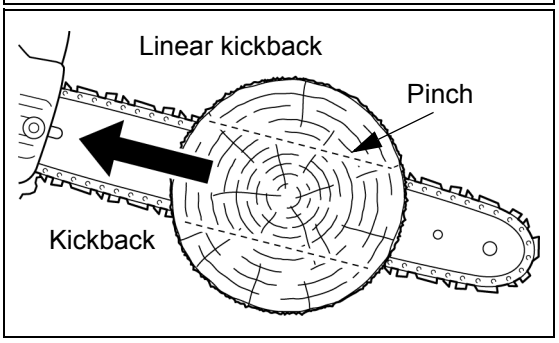

© 2/2017 ECHO Inc.

Correct Use Of Chain Brake

Chain Brake Operation

- Set the lever in the unlocked position before starting to cut.
- If the brake is tripped by kickback reaction, the chain will stop immediately. Release the throttle to avoid possible damage to the engine or clutch.
- Do not attempt to operate the engine with the brake locked.

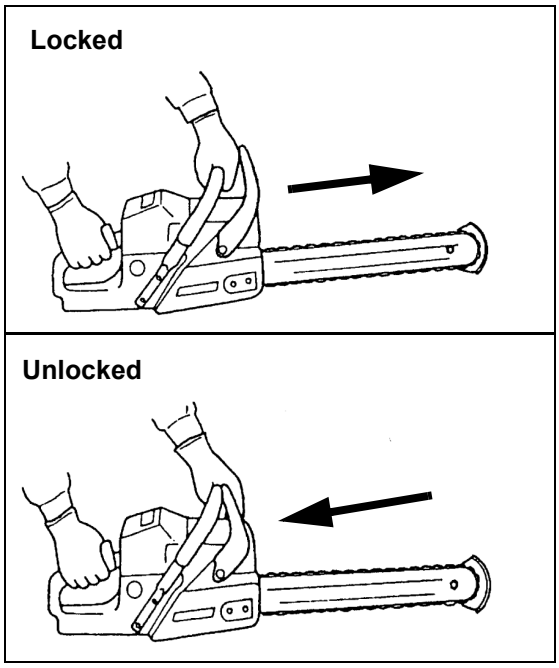

Testing The Brake

- Start the engine on a solid level surface and run at a fast idle until warm.
- Hold the saw firmly by the handles and accelerate the engine to a fast idle.
- Slowly operate the chain brake lever while holding the saw firmly on the ground. When the brake lever trips, the chain should stop. Immediately release the throttle trigger.

NOTICE

Do not allow the saw to tip forward in order to avoid damage to the chain.

⚠ WARNING

If the chain does not stop immediately, return the saw to your authorized dealer for repair.

Note:

- For practice, while cutting a small tree, push the lever forward to lock the brake.
- Confirm that the brake works properly before each use.
- If the chain brake is clogged with wood chips, function of the brake may deteriorate. Always keep the device clean.
- Do not increase engine RPM's while the chain brake is locked.

The installation of a chain brake may be mandatory by law or as stipulated by insurance regulations in your area of operation. You should inquire through local government offices, your employer or your local dealer to ensure that your chain saw conforms to the required safety standard.

Chain brakes have been designed and tested to comply with international safety standards as follows.

USA: ANSI Standard B175.1 Safety Requirement for chain saws

⚠ WARNING

ANSI Standard B175.1 stipulates that the brake shall stop the chain 0.12 seconds at an engine speed of 13,500 r/min. It is the responsibility of the owner/operator to ensure that the brake is serviced, adjusted and tested strictly in accordance with the instructions as detailed here in order to ensure that the brake performance is maintained in compliance with the Standard B175.1.

© 2/2017 ECHO Inc.

Automatic Chain Brake

Kickback produced from the tip of the guide bar will trip the automatic chain brake. To make sure that the automatic chain brake operates properly, follow these steps:

1. Stop the engine.
2. Hold the saw with the guide bar approximately 35 cm (14 in.) above a wooden surface. Right hand should hold the rear handle, and left hand should hold the front handle.
3. Release the front handle and drop the end of the guide bar against the wooden surface.
4. The impact should lock the chain brake.

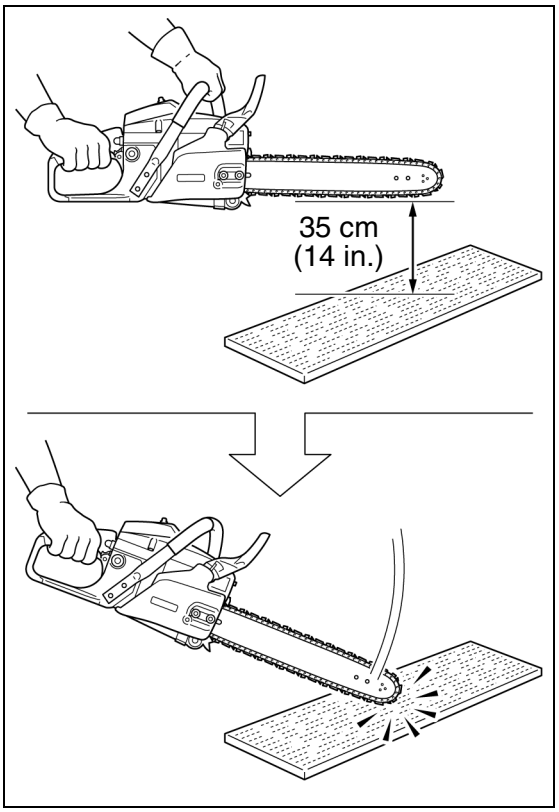

NOTICE

When checking the operation of the automatic chain brake, use a soft surface substance like wood to absorb the impact so the chain is not damaged.

Other Safety Precautions

1. Do not operate a chain saw with one hand! Serious injury to the operator, helpers, bystanders, or any combination of these persons may result from one-handed operation. A chain saw is intended for two-handed use.
2. Do not operate a chain saw when you are fatigued.
3. Use safety footwear, snug-fitting clothing and protective gloves. Wear eye, hearing, and head protection devices.
4. Use caution when handling fuel. Move the chain saw at least 3 m (10 feet) from the fueling point before starting the engine.
5. Do not allow other persons to be near the chain saw when starting or cutting with the chain saw. Keep bystanders and animals out of the work area.
6. Do not start cutting until you have a clear work area, secure footing, and a planned retreat path from the falling tree.
7. Keep all parts of your body away from the saw chain when the engine is running.
8. Before you start the engine, make sure that the saw chain is not contacting anything.
9. Carry the chain saw with the engine stopped, the guide bar and saw chain to the rear, and the muffler away from your body.
10. Do not operate a chain saw that is damaged, improperly adjusted, or not completely and securely assembled. Be sure that the saw chain stops moving when the throttle control trigger is released.
11. Shut off the engine before setting the chain saw down.
12. Use extreme caution when cutting small size brush and saplings because slender material may catch the saw chain and be whipped toward you or pull you off balance.
13. When cutting a limb that is under tension, be alert for spring-back so that you will not be struck when the tension in the wood fibers is released.

© 2/2017 ECHO Inc.

14. Keep the handles dry, clean, and free of oil or fuel mixture.
15. Operate the chain saw only in well ventilated areas.
16. Do not operate a chain saw in a tree unless you have been specifically trained to do so.
17. All chain saw service, other than items listed in the Instruction manual maintenance instructions, should be performed by competent service personnel. (For example, if improper tools are used to remove the flywheel or if an improper tool is used to hold the flywheel in order to remove the clutch, structural damage to the flywheel could occur and could subsequently cause the flywheel to burst.)
18. When transporting your chain saw, use the appropriate guide bar scabbard.
19. A spark arrestor muffler approved to SAE Standard J335 is standard on this chain saw to reduce the possibility of forest fires. Do not operate the chain saw with a loose or defective muffler. Do not remove the spark arrestor screen.

⚠ WARNING

Chain saws shall be used in accordance with the operating instructions and safety precautions listed in the operator's manual(s). It shall be the responsibility of the owner to see that such instructions and precautions are given to every operator who uses the saw.

⚠ WARNING

- ***During operation, the muffler or catalytic muffler and surrounding cover become hot.***
- ***Never suspend the saw on a lanyard with the engine running.***
- ***Always use the saw from the right-hand side of your body –*** **NEVER** ***from the left side.***
- ***Always wear proper safety clothing to protect your lower body from sharp saw chain and hot muffler.***
- ***Always keep exhaust area clear of flammable debris during transportation or when storing, otherwise serious property damage or personal injury may result.***

⚠ WARNING

Moving parts can amputate fingers or cause severe injuries. Keep hands, clothing and loose objects away from all openings.

- **ALWAYS** ***stop engine, disconnect spark plug, and make sure all moving parts have come to a complete stop before removing obstructions, clearing debris, or servicing unit.***
- **DO NOT** ***start or operate unit unless all guards and protective covers are properly assembled to unit.***
- **NEVER** ***reach into any opening while the engine is running. Moving parts may not be visible through openings.***

⚠ WARNING

Using improper replacement components or removing safety devices may result in serious or fatal injury.

© 2/2017 ECHO Inc.

⚠ WARNING

Periodically Check fuel system (fuel lines, vent, grommet, fuel tank, and fuel cap) for leaks especially if the unit is dropped. If damage or leaks are found, do not use unit, otherwise serious personal injury or property damage may occur. Have unit repaired by an authorized servicing dealer before using..

Personal Condition and Safety Equipment

⚠ WARNING

Users of this product risk injury to themselves and others if the unit is used improperly and/or safety precautions are not followed. Proper clothing and safety gear must be worn when operating unit.

Physical Condition

Your judgment and physical dexterity may not be good:

- If you are tired or sick.
- If you are taking medication.
- If you have taken alcohol or drugs.

Operate unit only if you are physically and mentally well.

Eye Protection

⚠ WARNING

- **Eye protection that meets ANSI Z87.1 or CE requirements must be worn whenever you operate the unit.**
- **For additional safety, a full-face shield may be worn over safety glasses or goggles to provide protection from sharp branches or flying debris.**

Hand Protection

Wear sturdy, no-slip, rubber work gloves to improve your grip on the handles. Gloves also provide protection against cuts and scratches, cold environments, and reduce the transmission of machine vibration to your hands.

Hearing/Ear Protection

ECHO recommends wearing hearing protection whenever unit is used.

Breathing Protection

Operators who are sensitive to dust or other common airborne allergens may need to wear a dust mask to prevent inhaling these materials while operating unit. Dust masks can provide protection against dust, plant debris, and other plant matter such as pollen. Make sure the mask does not impair your vision, and replace the mask as needed to prevent air restrictions.

Proper Clothing

Wear snug-fitting, durable clothing:

- Pants should have long legs, shirts should have long sleeves.
- DO NOT WEAR SHORTS.

© 2/2017 ECHO Inc.

- DO NOT WEAR TIES, SCARVES, JEWELRY, or clothing with loose or hanging items that could become entangled in moving parts or surrounding growth.
- Keep clothing buttoned or zipped, and keep shirt tails tucked in.

Wear sturdy work shoes with nonskid rubber soles:

- DO NOT WEAR OPEN TOED SHOES.
- DO NOT OPERATE UNIT BAREFOOTED.

Keep long hair away from engine and air intake. Retain hair with cap or net.

Heavy protective clothing can increase operator fatigue, which may lead to heat stroke. Schedule heavy work for early morning or late afternoon hours when temperatures are cooler.

WARNING

The components of this machine generate an electromagnetic field during operation, which may interfere with some pacemakers. To reduce the risk of serious or fatal injury, persons with pacemakers should consult with their physician and the pacemaker manufacturer before operating this machine. In the absence of such information, ECHO does not recommend the use of this machine by anyone who has a pacemaker.

Extended Operation / Extreme Conditions

CAUTION

Prolonged exposure to cold and/or vibration may result in injury. Read and follow all safety and operation instructions to minimize risk of injury. Failure to follow instructions may result in painful wrist/hand/arm injuries.

It is believed that a condition called Raynaud's Phenomenon, which affects the fingers of certain individuals, may be brought about by exposure to vibration and cold. Exposure to vibration and cold may cause tingling and burning sensations, followed by loss of color and numbness in the fingers. The following precautions are strongly recommended, because the minimum exposure, which might trigger the ailment, is unknown.

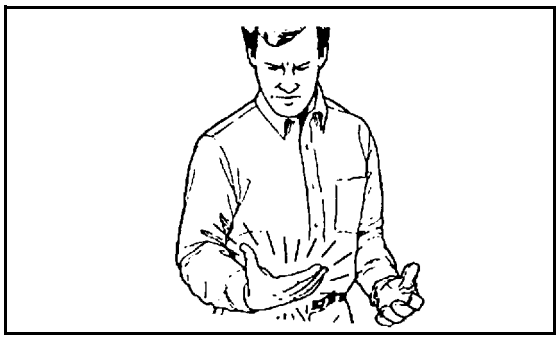

- Keep your body warm, especially the head, neck, feet, ankles, hands, and wrists.
- Maintain good blood circulation by performing vigorous arm exercises during frequent work breaks, and also by not smoking.
- Limit the hours of operation. Try to fill each day with jobs where operating the unit or other hand-held power equipment is not required.
- If you experience discomfort, redness, and swelling of the fingers followed by whitening and loss of feeling, consult your physician before further exposing yourself to cold and vibration.

© 2/2017 ECHO Inc.

Repetitive Stress Injuries (RSI)

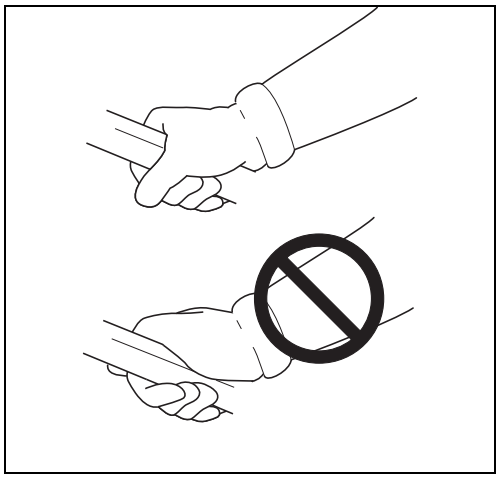

It is believed that overusing the muscles and tendons of the fingers, hands, arms, and shoulders may cause soreness, swelling, numbness, weakness, and extreme pain in those areas. Certain repetitive hand activities may put you at a high risk for developing a Repetitive Stress Injury (RSI). An extreme RSI condition is Carpal Tunnel Syndrome (CTS), which could occur when your wrist swells and squeezes a vital nerve that runs through the area. Some believe that prolonged exposure to vibration may contribute to CTS. CTS can cause severe pain for months or even years.

To reduce the risk of RSI/CTS, do the following:

- Avoid using your wrist in a bent, extended, or twisted position. Instead try to maintain a straight wrist position. Also, when grasping, use your whole hand, not just the thumb and index finger.
- Take periodic breaks to minimize repetition and rest your hands.
- Reduce the speed and force with which you do the repetitive movement.
- Do exercise to strengthen the hand and arm muscles.
- Immediately stop using all power equipment and consult a doctor if you feel tingling, numbness, or pain in the fingers, hands, wrists, or arms. The sooner RSI/CTS is diagnosed, the more likely permanent nerve and muscle damage can be prevented.

⚠ DANGER

All over head electrical conductors and communications wires can have electricity flow with high voltages. This unit is not insulated against electrical current. Never touch wires directly or indirectly, otherwise serious injury or death may result.

⚠ DANGER

Do not operate this product indoors or in inadequately ventilated areas. Engine exhaust contains poisonous emissions and can cause serious injury or death.

© 2/2017 ECHO Inc.

Symbols and Signs

Symbol form/shape	Symbol description/application	Symbol form/shape	Symbol description/application
	WARNING! Read and follow all safety precaution in the instruction manual. Failure to follow instructions could result in serious personal injury.		Choke control “COLD START” position (choke closed)
	Wear Eyes, Ears And Head Protection		Oil And Gasoline Mixture
	Tip contact may cause the guide bar to move suddenly upward and backward, which may cause serious injury		Chain Oil Fill
	Contact of the guide bar tip with any object should be avoided		Chain Oiler Adjustment
	Both of the operator’s hands must be used to operate the chain saw		Purge Pump
	Hot Surface	L	Carburetor Adjustment - Low Speed Mixture
	Chain Brake Operation	H	Carburetor Adjustment - High Speed Mixture
STOP	Emergency Stop	T	Carburetor Adjustment - Idle Speed
	Measured maximum kickback value, without brake, for approved bar and chain combinations.		

© 2/2017 ECHO Inc.

Manual Safety Symbols and Important Information

Throughout this manual and on the product itself, you will find safety alerts and helpful, informational messages preceded by symbols or key words. The following is an explanation of those symbols and key words and what they mean to you.

DANGER

The safety alert symbol accompanied by the word "DANGER" calls attention to an act or condition which WILL lead to serious personal injury or death if not avoided.

WARNING

The safety alert symbol accompanied by the word "WARNING" calls attention to an act or condition which CAN lead to serious personal injury or death if not avoided.

CAUTION

The safety alert symbol accompanied by the word "CAUTION" calls attention to an act or condition which may lead to minor or moderate personal injury if not avoided.

NOTICE

The enclosed message provides information necessary for the protection of the unit.

Note: This enclosed message provides tips for use, care and maintenance of the unit.

CIRCLE AND SLASH SYMBOL
This symbol means the specific action shown is prohibited. Ignoring these prohibitions can result in serious or fatal injury.

EMISSION CONTROL (EXHAUST / EVAPORATIVE)

CARB And EPA Emissions Control Information

The emission control system for the engine is EM (engine modification) and, if the second to last character of the Engine Family on the Emission Control Information label (sample below) is "B", "C", "K", or "T", the emission control system is EM and TWC (3-way catalyst). The fuel tank/fuel line emission control system is EVAP (evaporative emissions). Evaporative emissions for California models are only applicable to fuel tanks.

EMISSION CONTROL INFORMATION
ENGINE FAMILY: EEHXS.0214EQ DISPLACEMENT: 21.2cc
EMISSION COMPLIANCE PERIOD: 50Hours
THIS ENGINE MEETS 2013 U.S.EPA EXH/EVP & CALIFORNIA
EXH/EVP EMISSION REGULATIONS FOR S.O.R.E. REFER TO OWNER'S
MANUAL FOR MAINTENANCE SPECIFICATIONS AND ADJUSTMENTS.
YAMABIKO CORP. MMM/YYYY E

An Emission Control Label is located on the engine. (This is an EXAMPLE ONLY, information on label varies by engine FAMILY).

EMISSION CONTROL INFORMATION
ENGINE FAMILY: CEHXS.0214KL DISPLACEMENT: 21.2cc
EMISSION COMPLIANCE PERIOD: 300Hours
THIS ENGINE MEETS 2012 U.S. EPA EXH/EVP & CALIFORNIA
EXH/EVP EMISSION REGULATIONS FOR S.O.R.E. REFER TO OWNER'S
MANUAL FOR MAINTENANCE SPECIFICATIONS AND ADJUSTMENTS.
YAMABIKO CORP. MMM/YYYY E

Product Emission Durability (Emission Compliance Period)

The 50 or 300 hour emission compliance period is the time span selected by the manufacturer certifying the engine emissions output meets applicable emissions regulations, provided that approved maintenance procedures are followed as listed in the Maintenance Section of this manual.

© 2/2017 ECHO Inc.

DESCRIPTION

Locate the safety decal(s) on your unit. Make sure the decal(s) is legible and that you understand and follow the instructions on it. If a decal cannot be read, a new one can be ordered from your ECHO dealer.

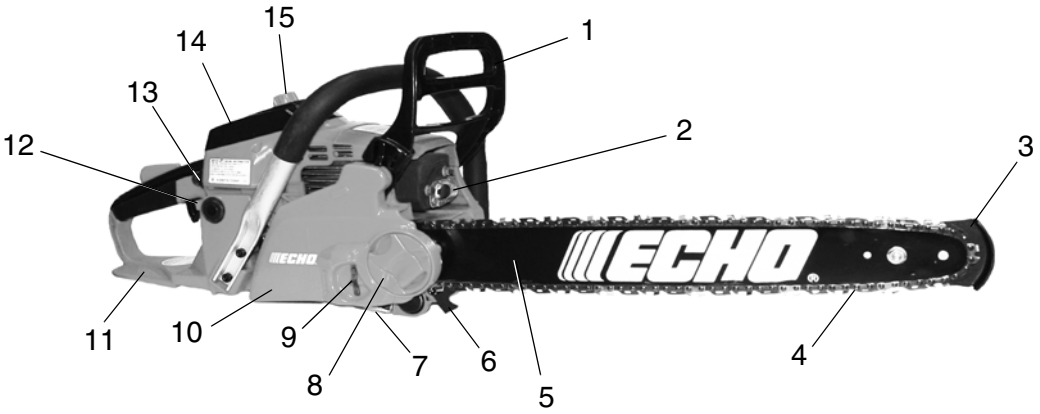

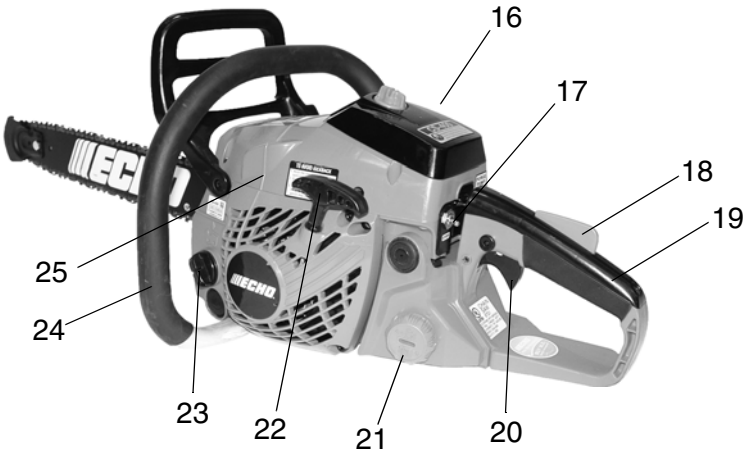

© 2/2017 ECHO Inc.

1. **CHAIN BRAKE LEVER/FRONT HAND GUARD** - Locks and unlocks the chain brake to stop or allow saw chain rotation. Guard between the front handle and the saw chain helps protect the hand from injuries if the hand slips off the handle.
2. **SPARK ARRESTOR MUFFLER or SPARK ARRESTOR MUFFLER WITH CATALYST** - The muffler or catalytic muffler controls exhaust noise and emission. The spark arrestor screen prevents hot, glowing particles of carbon from leaving the muffler. Keep exhaust area clear of flammable debris.
3. **TIP GUARD** - Anti-kickback device attached to the bar nose.
4. **SAW CHAIN** - Chain, serving as a cutting tool.
5. **GUIDE BAR** - The part that supports and guides the saw chain.
6. **SPIKED BUMPER** - Device, fitted in front of the guide bar mounting point, acting as a pivot when in contact with a tree or log.
7. **CHAIN CATCHER** - A projection designed to reduce the risk of the operator's right hand from being hit by a chain which has broken or derailed from the guide bar during cutting.
8. **TOOL-LESS SPROCKET GUARD KNOB** - Device for installing and removing guide bar cover.
9. **CHAIN TENSION ADJUSTER** - Device to adjust chain tension.
10. **CHAIN BRAKE/SPROCKET GUARD** - Protective cover for the chain brake, guide bar, saw chain, clutch, and sprocket when the chain saw is in use.
11. **REAR HAND GUARD** - Extension on the lower part of the rear handle for protecting the hand from the chain if it breaks or derails.
12. **CHOKE CONTROL KNOB** - Device for enriching the fuel/air mixture in the carburetor to aid cold starting. Also activates fast idle throttle latch.
13. **PURGE PUMP** - When starting engine, push purge pump 3 or 4 times.
14. **AIR CLEANER COVER** - Covers air filter.
15. **CLEANER COVER KNOB** - Device for installing the air cleaner cover.
16. **SPARK PLUG** - Provides spark to ignite fuel mixture.
17. **IGNITION SWITCH** - Device for connecting and disconnecting the ignition system and thus allowing the engine to be started or stopped.
18. **THROTTLE TRIGGER LOCKOUT** - A safety lever which must be depressed before the throttle trigger can be activated. **Prevents accidental operation of the throttle trigger.**
19. **REAR HANDLE - for RIGHT HAND** - Support handle located towards the rear of the engine housing.
20. **THROTTLE TRIGGER** - Device activated by the operator's finger, for controlling the engine speed. Also releases fast idle throttle latch when squeezed and released immediately after starting engine.
21. **FUEL TANK CAP** - For sealing the fuel tank.
22. **STARTER HANDLE** - Pull handle slowly until starter engages then quickly and firmly. When engine starts, return handle slowly. DO NOT let handle snap back or damage to unit will occur.
23. **OIL TANK CAP** - For sealing the oil tank.
24. **FRONT HANDLE - for LEFT HAND** - Support handle located at the front of the engine housing.
25. **CYLINDER COVER** - The cooling airflow grill. It covers the cylinder, spark plug and silencer.

CHAIN SAW TERMS

1. **FAST IDLE** -Throttle setting that causes engine to operate at a faster speed for easier starting.
2. **THROTTLE LATCH** - Device that sets idle speed to fast idle when choke control is operated.
3. **CHAIN BRAKE** - Stops the saw chain.
4. **DRIVE SPROCKET** - Drives saw chain.
5. **CLUTCH** - Turns drive sprocket when engine rpm is fast enough to provide the power needed for cutting.

© 2/2017 ECHO Inc.

Preparation For Use

WARNING

Saw chain is sharp! Always wear gloves when handling assembly, otherwise serious personal injury may result.

Note: The machine may be delivered with guide bar, tip guard, and saw chain separated. Install guide bar, tip guard, and saw chain as follows.

For more information scan this QR code.

Tip Guard to Bar Instructions

Tools Needed: Two 11 mm (7/16 in.) Wrenches. **For saws with tip guard P/N 2893201 and Symmetrical or Asymmetrical Low-Kick type (Double Guard) guide bars.**

1. Install bolt (A) in ***rear*** hole (B) of tip guard and through front hole (C) in guide bar.
2. **IMPORTANT:** Dimple (D) in tip guard must engage recess (E) in guide bar.
3. Securely tighten nut (F) and bolt (A).

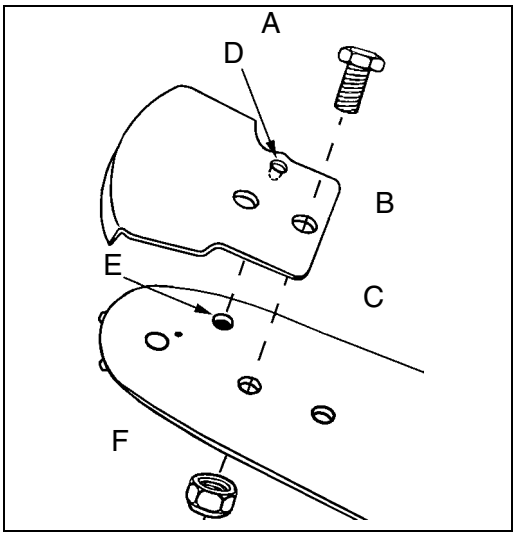

Guide Bar and Saw Chain Installation/Removal

Note: Align the brake connector (B) of the sprocket guard to the groove on the side of the brake lever (Front hand guard).

For more information scan this QR code.

1. Remove air cleaner cover and disconnect spark plug lead.
2. Move the chain brake lever (A) (Front hand guard) fully rearward to remove or install the sprocket guard (C).
3. Extend the knob lever (D), then turn knob counterclockwise to remove knob and sprocket guard.
4. Remove guide bar and saw chain if necessary.

Note: See “Maintenance and Care” section for guide bar/saw chain maintenance procedures.

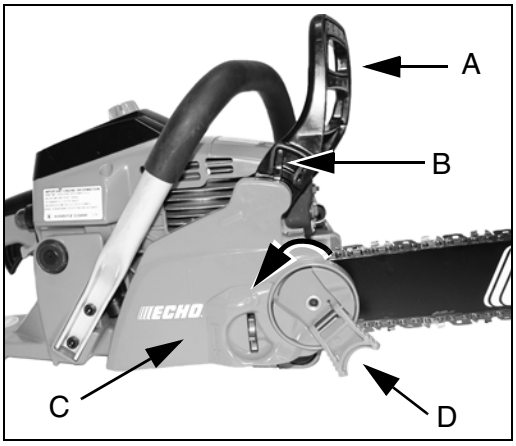

© 2/2017 ECHO Inc.

5. Mount guide bar on studs (E) and slide toward sprocket (F) to make saw chain installation easier. Install saw chain around sprocket and guide bar as shown, with cutters on top of guide bar facing forward.

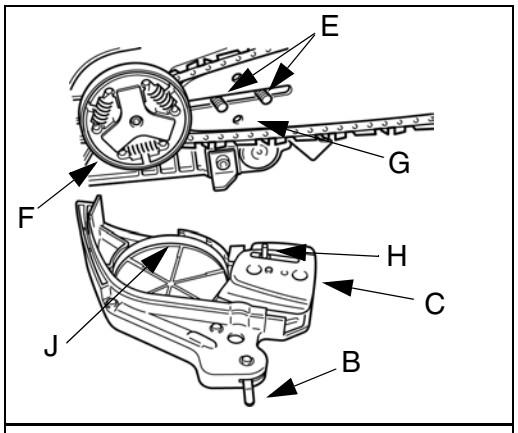

6. Install the sprocket guard (C) over the guide bar studs. Ensure chain tension adjuster pin (H) fits into the guide bar adjuster hole (G), brake band (J) is positioned around clutch drum. Install knob (D) and tighten securely with bar nose held up.

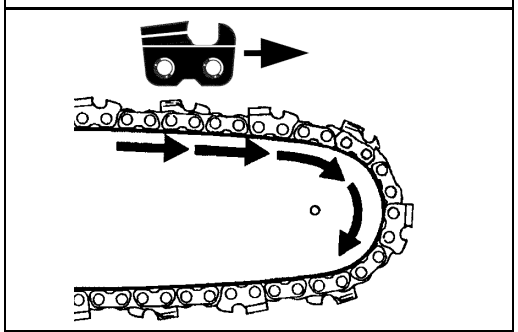

7. Turn saw over, and check brake band (J) for correct position on clutch drum. If brake band is not in place around drum, remove sprocket guard, and reinstall guard and knob.
8. Adjust saw chain tension, as instructed in “Adjustment, Chain Tension”.

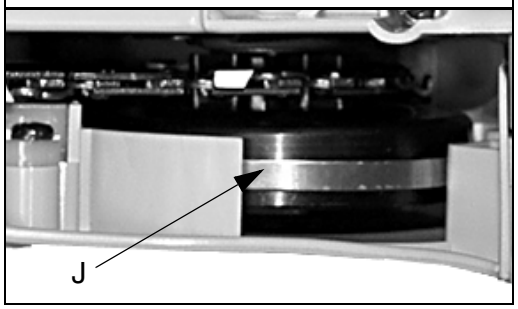

⚠ WARNING

Improper sprocket guard assembly can result in serious injury, and will cause severe saw damage if unit is started. Never start or operate saw if brake band is not in place on clutch drum. Always check chain brake operation after replacing guard. Do not use saw if chain brake does not function properly.

Adjusting Chain Tension

For more information scan this QR code.

NOTICE

Always loosen sprocket guard knob before turning the chain tension adjuster, otherwise the sprocket guard and tensioner will be damaged.

1. Remove air cleaner cover and disconnect spark plug lead.
2. Loosen sprocket guard knob.

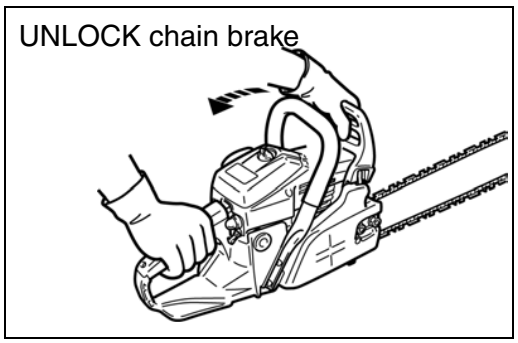

© 2/2017 ECHO Inc.

3. Hold the bar nose up, and turn the adjuster toward (+) until chain contacts underside of the bar.
4. Tighten knob with the bar nose held up.
5. Pull the chain around the bar by hand. Loosen the adjustment if you feel tight spots.
6. When chain is properly tensioned, tighten clutch cover knob securely.
7. Assemble components in reverse order.
8. Keep chain properly tensioned at all times.

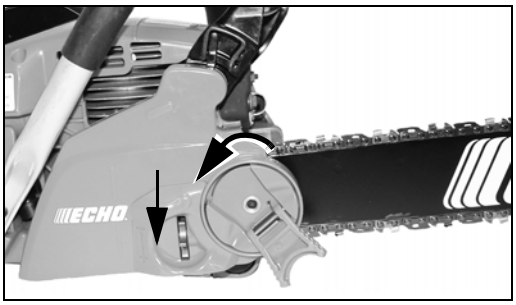

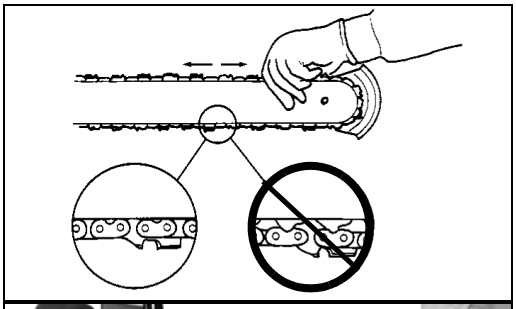

Note: All chains require frequent adjustments.

OPERATION

Fuel

⚠ WARNING

Diesel fuels and alternative fuels, such as E-15 (15% ethanol), E-85 (85% ethanol) or any fuels not meeting ECHO requirements are NOT approved for use in ECHO 2-stroke gasoline engines. Use of diesel or alternative fuels may cause performance problems, loss of power, overheating, fuel vapor lock, and unintended machine operation, including, but not limited to, improper clutch engagement. Diesel or alternative fuels may also cause premature deterioration of fuel lines, gaskets, carburetors and other engine components.

Fuel Requirements

Gasoline - Use 89 Octane [R+M/2] (mid grade or higher) gasoline known to be good quality. Gasoline may contain up to 10% Ethanol (grain alcohol) or 15% MTBE (methyl tertiary-butyl ether). Gasoline containing methanol (wood alcohol) is **NOT** approved. ECHO brand Power Fuel™ is 93 octane, ethanol-free fuel premixed with ECHO Red Armor® engine oil at 50:1 ratio. Use of ECHO Power Fuel™ is recommended to extend engine life in all air-cooled 2-stroke and 2/4-stroke hybrid engines.

Two Stroke Oil - A two-stroke engine oil meeting ISO-L-EGD (ISO/CD 13738) and J.A.S.O. FD Standards must be used. Echo brand premium Power Blend X™ Universal 2-Stroke Oil meets these standards. Engine problems due to inadequate lubrication caused by failure to use an ISO-L-EGD (ISO/CD 13738) and J.A.S.O. M345-FD certified oil, such as Echo premium Power Blend X™, will void the two-stroke engine warranty.

© 2/2017 ECHO Inc.

NOTICE

Echo premium Power Blend X™ Universal 2-Stroke Oil may be mixed at 50:1 ratio for application in all Echo engines sold in the past regardless of ratio specified in those manuals.

Handling Fuel

⚠ DANGER

Fuel is VERY flammable. Use extreme care when mixing, storing or handling, or serious personal injury may result.

- ***Use an approved fuel container.***
- ***DO NOT smoke near fuel.***
- ***DO NOT allow flames or sparks near fuel.***
- ***Fuel tanks/cans may be under pressure. Always loosen fuel caps slowly allowing pressure to equalize.***
- ***NEVER refuel a unit when the engine is HOT or RUNNING!***
- ***DO NOT fill fuel tanks indoors. ALWAYS fill fuel tanks outdoors over bare ground.***
- ***DO NOT overfill fuel tank. Wipe up spills immediately.***
- ***Securely tighten fuel tank cap and close fuel container after refueling.***
- ***Inspect for fuel leakage. If fuel leakage is found, do not start or operate unit until leakage is repaired.***
- ***Move at least 3 m (10 ft.) from refueling location before starting the engine.***

Mixing Instructions

1. Fill an approved fuel container with half of the required amount of gasoline.
2. Add the proper amount of 2-stroke oil to gasoline.
3. Close container and shake to mix oil with gasoline.
4. Add remaining gasoline, close fuel container, and remix.

Fuel to Oil Mix - 50:1 Ratio			
US		Metric	
Gas	Oil	Gas	Oil
Gallons	Oz.	Liter	CC.
1	2.6	5	100
2	5.2	10	200
5	13	25	500

NOTICE

Spilled fuel is a leading cause of hydrocarbon emissions. Some states may require the use of automatic fuel shut-off containers to reduce fuel spillage.

For more information scan this QR code.

After use

- DO NOT store a unit with fuel in its tank. Leaks can occur. Return unused fuel to an approved fuel storage container.

Storage - Fuel storage laws vary by locality. Contact your local government for the laws affecting your area. As a precaution, store fuel in an approved, airtight container. Store in a well-ventilated, unoccupied building, away from sparks and flames.

© 2/2017 ECHO Inc.

NOTICE

Stored fuel ages. Do not mix more fuel than you expect to use in thirty (30) days, ninety (90) days when a fuel stabilizer is added.

NOTICE

Stored two-stroke fuel may separate. ALWAYS shake fuel container thoroughly before each use.

Chain Lubricant

Note: Cap indication - Fuel/oil tanks are indicated by the following illustrations

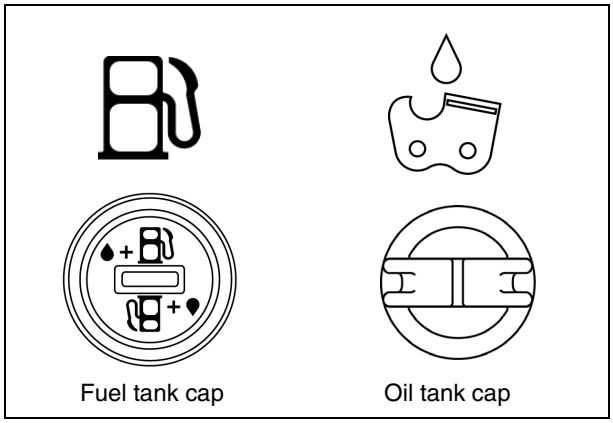

Proper lubrication of the chain while in operation reduces friction between the chain and the guide bar to a minimum and assures a longer service life.

- Use bar and chain oil of high quality for this purpose.
- Do not use used or reclaimed oil to avoid various oiler problems.
- Use high quality bar and chain oil.
- Use bar and chain oil of the following grades:
  - SAE No. 30....in summer
  - SAE No. 10....in winter or when cutting resinous trees.
- When refueling, also refill chain oil.

WARNING

Moving parts can amputate fingers or cause severe injuries. Keep hands, clothing and loose objects away from all openings. Always stop engine, disconnect spark plug, and make sure all moving parts have come to a complete stop before removing obstructions, clearing debris, or servicing unit.

WARNING

Engine exhaust IS HOT, and contains Carbon Monoxide (CO), a poison gas. Breathing CO can cause unconsciousness, serious injury, or death. Exhaust can cause serious burns. ALWAYS position unit so that exhaust is directed away from your face and body.

WARNING

Operation of this equipment may create sparks that can start fires around dry vegetation.This unit is equipped with a spark arrestor to prevent discharge of hot particles from the engine. Metal cutters can also create sparks if the cutter strikes rocks, metal, or other hard objects. Contact local fire authorities for laws or regulations regarding fire prevention requirements.

© 2/2017 ECHO Inc.

Winter Operation

Air cleaner cover - Use the winter plug (A) to prevent carburetor trouble in winter.

- Remove air cleaner cover. Remove plug from warm weather position (B), and install into cold weather position (C).

Note: For operation at normal temperature (5°C [41°F]) return the plug to its original position. To prevent over heating of the engine.

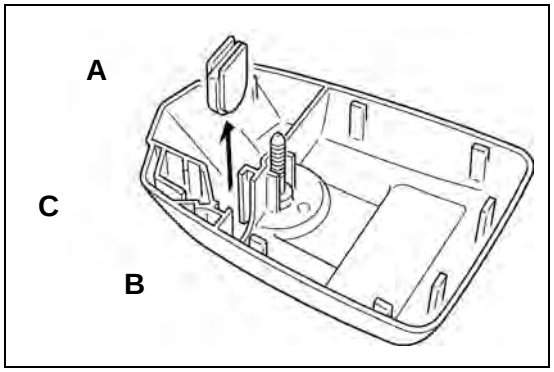

Starting Cold Engine

For more information scan this QR code.

⚠ WARNING

Make sure the bar and chain are free from any obstruction when starting the chain saw.

1. Move chain brake lever fully FORWARD to LOCK chain brake before starting.

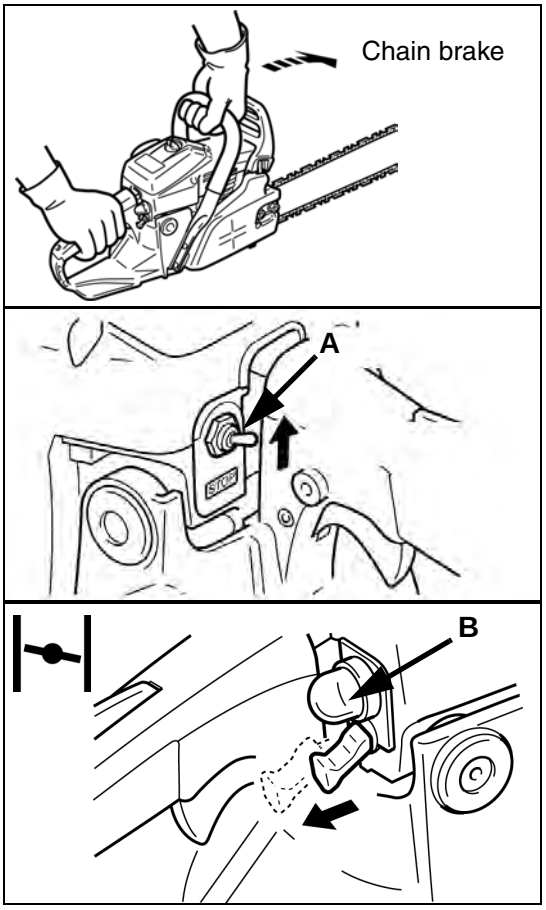

2. Fill the fuel tank with fuel mixture. Do not over fill.
3. Fill the chain oil tank with lubricant. Do not over fill.
4. Move ignition switch (A) UP to "**RUN**" position.
5. Push purge pump (B) 3 to 4 times or until fuel is visible in purge pump.
6. Pull choke control knob all the way OUT (CLOSED [ ] choke position).

⚠ WARNING

- ***After choke control knob is pulled and then knob is returned to original position, throttle remains slightly open (fast idle latch condition).***
- ***The chain will attempt to move when engine is started with fast idle throttle latch engaged.***
- ***Do not start engine before chain brake is locked.***

© 2/2017 ECHO Inc.

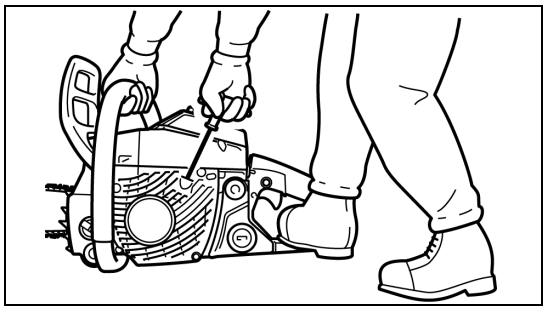

7. Securely hold the chain saw and pull starter handle several times until first starting sound.
8. Push choke control knob all the way IN (OPEN choke position).
9. Pull starter handle to start the engine.

Note: Do not pull starter rope out to the maximum possible position.

Do not allow recoil handle to snap back against the casing.

⚠ CAUTION

- ***After starting the engine, immediately squeeze and then release throttle trigger to release fast idle throttle latch, otherwise severe brake damage may occur.***
- ***Never use fast idle throttle latch for cutting.***
- ***Use the fast idle throttle latch only in starting.***

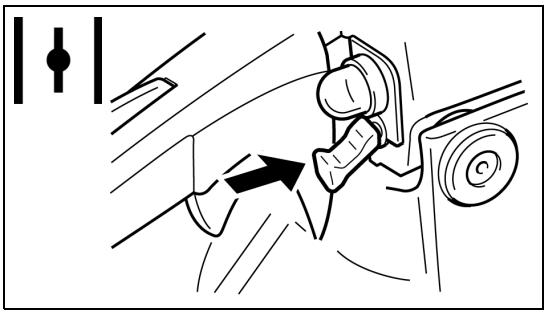

Note: If engine does not start after 5 pulls, repeat instructions.

Note: Do not increase engine speed while chain brake is locked. Severe brake damage will result.

Starting Warm Engine

⚠ WARNING

Make sure the bar and chain are free from any obstruction when starting the chain saw.

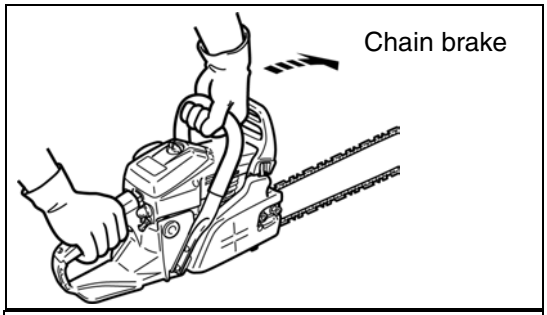

1. Move chain brake lever fully FORWARD to LOCK chain brake before starting.
2. Confirm there is fuel and chain oil in the tanks.
3. Move ignition switch UP to “**RUN**” position.

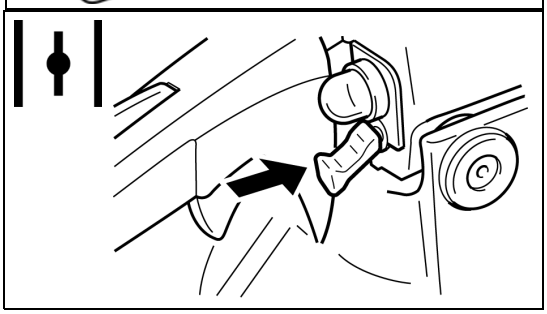

4. Securely hold the chain saw as shown and pull starter handle.
5. Choke may be used if necessary, but after first starting sound, squeeze throttle trigger to release choke and return engine to idle.

Note: If engine does not start after 5 pulls, use cold start procedure.

Note: Do not increase engine speed while chain brake is locked. Severe brake damage will result.

© 2/2017 ECHO Inc.

Running

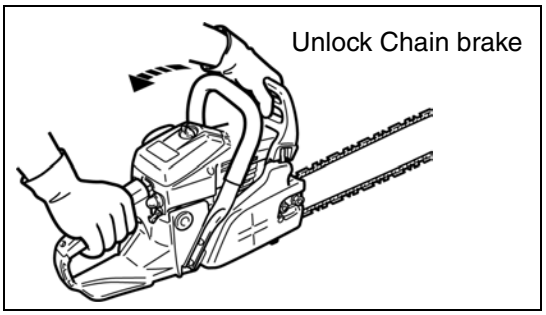

⚠ WARNING

The saw chain should not move at idle, otherwise serious personal injury may result.

Note: If saw chain moves adjust carburetor according to “Carburetor Adjustment” instructions in this manual, or see your dealer.

1. After engine starts, allow it to return to idle and warm up before using.
2. Move chain brake lever fully REARWARD to UNLOCK chain brake.

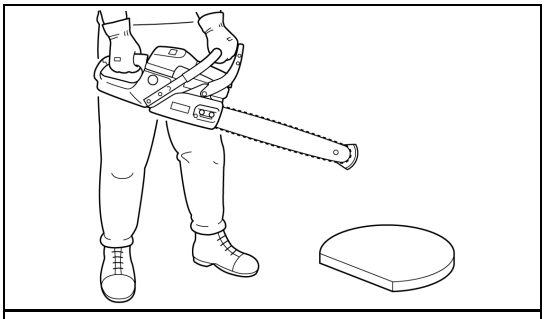

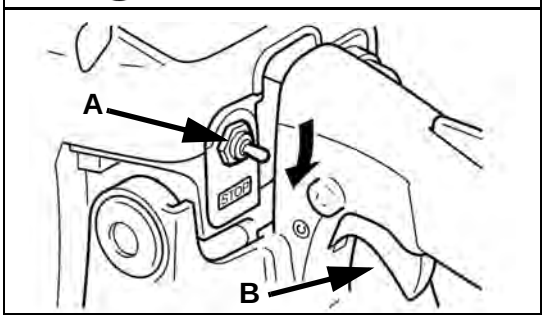

3. Squeeze throttle trigger (B) gradually and increase engine speed.
4. The chain starts running when the engine reaches clutch engagement speed (see technical data page).
5. Confirm proper acceleration and lubrication of chain and bar.
6. Do not run the engine at high speed unnecessarily.
7. Be sure that saw chain stops moving when throttle trigger is released.

Stopping

1. Release throttle trigger and allow engine to idle.
2. Move ignition switch (A) DOWN to “STOP” position.

Note: If engine does not stop, pull choke control knob out fully to stop engine.

Return the unit to your authorized dealer to check and repair stop switch before starting the engine again.

Checking Chain Tension

Chain tension should be checked frequently during work and corrected as necessary.

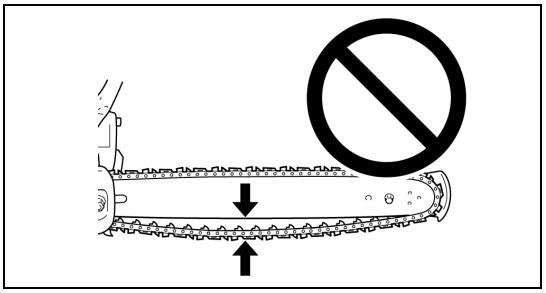

© 2/2017 ECHO Inc.

⚠ CAUTION

Do not operate with a loose chain.

Chain Lubrication Test

Hold the chain just above a dry surface and open the throttle to half speed for 30 seconds.

A thin line of “thrown” oil should be seen on the dry surface.

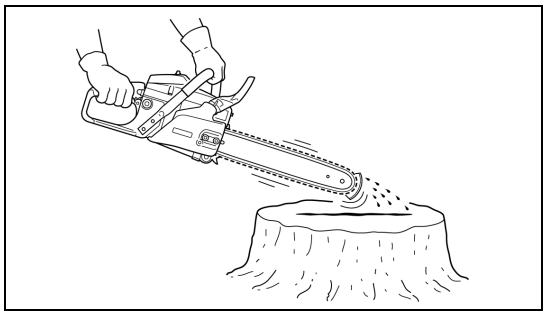

Cutting Instructions

For more information on scan this QR code.

General

⚠ WARNING

- ***This chain saw is designed for cutting wood. Do not cut metal, plastic or any non-wood material.***
- ***Read the “CHAIN SAW SAFETY MANUAL” included with your chain saw for additional cutting and safety instructions.***
- ***Wear suitable hearing protection such as earmuffs or earplugs to protect against objectionable or uncomfortable loud noises.***

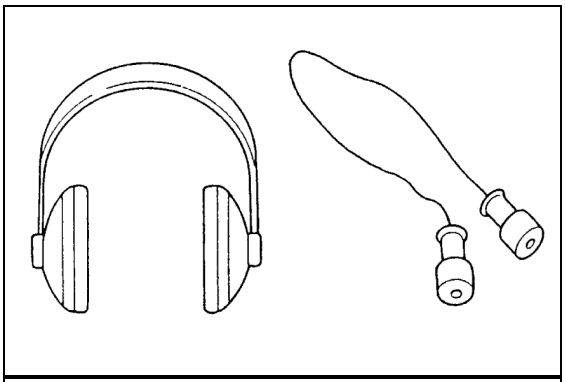

- ***Do not let the tip of the bar touch anything while the engine is running. At cutting speed the chain is moving at a high rate of speed. Should the tip contact a limb or log while the chain is moving, the tip will be pushed upward with considerable force. This is known as kickback. Avoid it!***

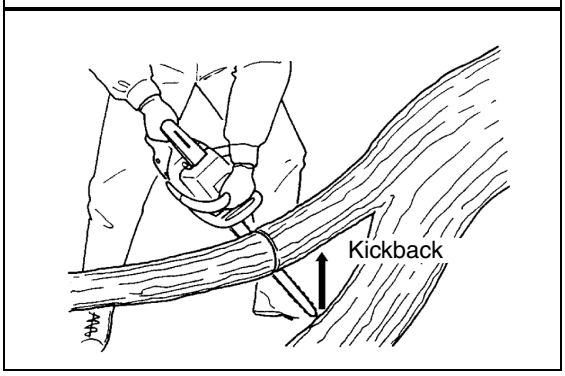

In all circumstances the operation of the chain saw is a one-man job. It is difficult at times to take care for your own safety, so don’t assume the responsibility for a helper as well. After you have learned the basic techniques of using the saw, your best aid will be your own good common sense.

The accepted way to hold the saw is to stand to the left of the saw with your left hand on the front handlebar and your right hand on the rear handle so you can operate the throttle trigger with your right index finger. Before attempting to fell a tree, cut some small logs or limbs. Become thoroughly familiar with the controls and the responses of the saw.

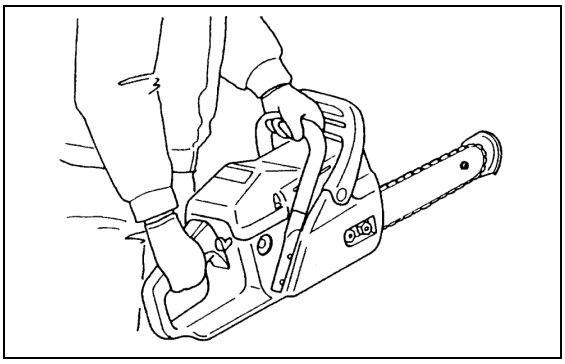

© 2/2017 ECHO Inc.

Start the engine, see that it is running properly. Squeeze the trigger to open the throttle wide open and start the cut. If the chain is properly sharpened, the cutting should be relatively effortless. It is not necessary to press down hard to make the saw cut. Pushing the saw too hard will slow the engine and cutting will actually be more difficult.

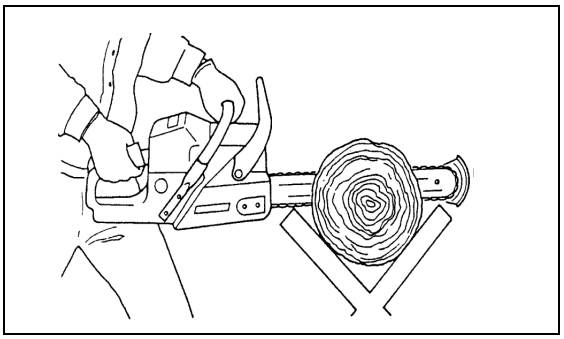

NOTICE

Sap from palm trees may corrode metal parts unless proper saw maintenance is performed. Make sure to clean metal parts from palm sap immediately after use.

- Remove sprocket cover. Clean wood chips and sawdust from cover and engine crankcase.
- Never use metal tools for cleaning which may scratch the metal paint and allow corrosion to develop.
- Clean sap accumulation from metal parts with cloth and warm water with soap.
- Rinse with clean water and dry metal surfaces.
- Apply a light coating of engine or bar and chain oil metal parts after they are cleaned.
- Install and properly tension guide bar and chain. Run engine for one minute alternating engine speed between full throttle for 5 seconds and idle for 5 seconds to coat metal parts with additional protective chain oil.

⚠ CAUTION

- "Do not run a chainsaw not under cutting load at wide open throttle longer than 5 seconds or engine damage may occur.
- "Keep chain properly tensioned during operation to prevent the chain from jumping out of the guide bar rail slot and damaging metal engine parts

Felling The Tree

For more information on scan this QR code.

⚠ WARNING

A falling tree can seriously damage anything it may hit - a car, a house, a fence, a power line, or another tree. There are ways to make a tree fall where you want it, so first decide where that is!

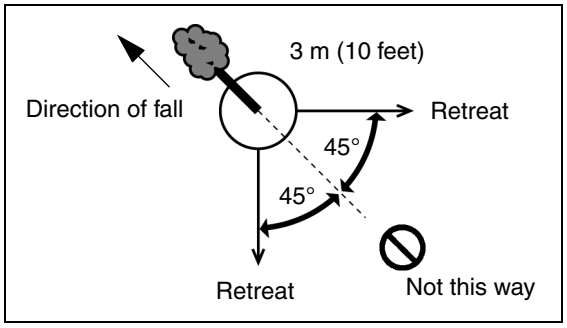

Before cutting, clear the area around the tree. You will need good footing while working and you should be able to work the saw without hitting any obstacles. Next, select a path of retreat. When the tree begins to fall you should retreat away from the direction of fall at a 45-degree angle and at least 3 m (10 feet) from the trunk to avoid the trunk kicking back over the stump.

© 2/2017 ECHO Inc.

Begin the cut on the side to which the tree is to fall. Cut a notch about 1/3 of the way into the tree. The position of this notch is important since the tree will try to fall “into” the notch. The felling cut is made on the side opposite the notch and at a level about 5 cm (2 in.) above the bottom of the notch. Do not try to cut through to the notch with the felling cut. The remaining wood between the notch cut and felling cut about 5 cm (2 in.) will act as a hinge when the tree falls, guiding it in the desired direction. When the tree starts to fall, kill the engine, place the saw on the ground and make your retreat quickly.

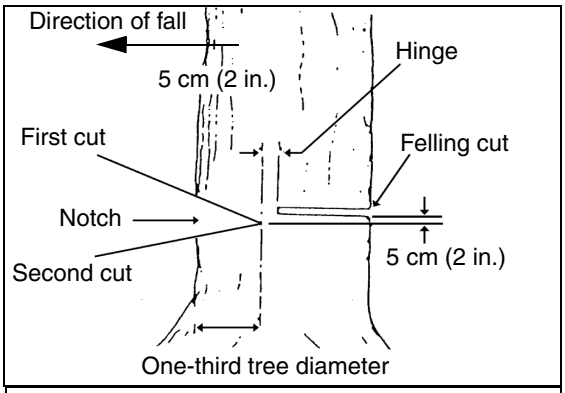

To fell big trees with a diameter exceeding twice the bar length, start the notching cuts from one side and draw the saw through to the other side of the notch. Start the back cut on one side of the tree, pivoting the saw through to form the desired hinge on that side. Then remove the saw for the second cut. Insert the saw in the first cut, very carefully so as not to cause kickback. The final cut is made by drawing the saw forward in the cut to reach the hinge.

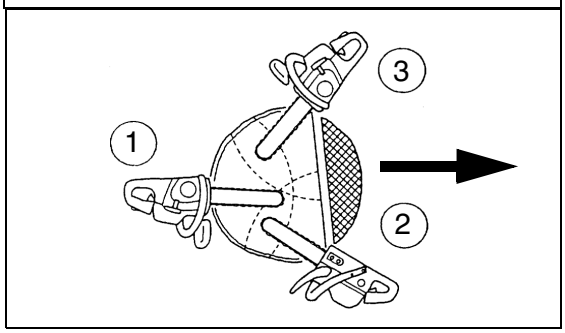

Limbing

Limbing a fallen tree is much the same as bucking. Never stand on the tree that you are limbing. When limbing, caution is the word. Be careful of the tip touching other limbs. Always use both hands.

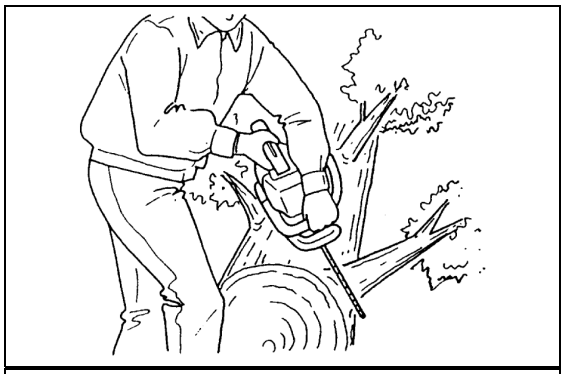

Don’t cut with the saw overhead or aligned vertically with your body. If the saw should kickback, you may not have enough control to prevent possible injury.

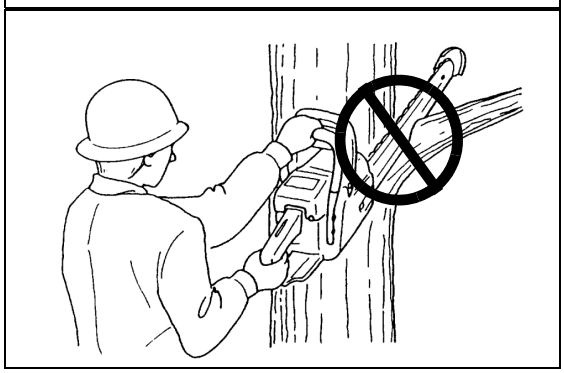

© 2/2017 ECHO Inc.

Bucking

Bucking is the sawing of a log or fallen tree into smaller pieces. There are a few basic rules which apply to all bucking operations:

- Keep both hands on the handles at all times.
- Support logs if possible.
- When cutting on a slope or hillside, always stand uphill.

Keep in mind that the wood is heavy and that it will bend and pinch the saw if improperly supported. The trunk will weaken at the point where you make the cut unless the tree is lying on perfectly flat ground or supported as shown. If you make the cut with the tree on the ground, don't let the saw's chain dig into the earth; it is harmful for the saw, and you stand a good chance of being struck by flying debris.

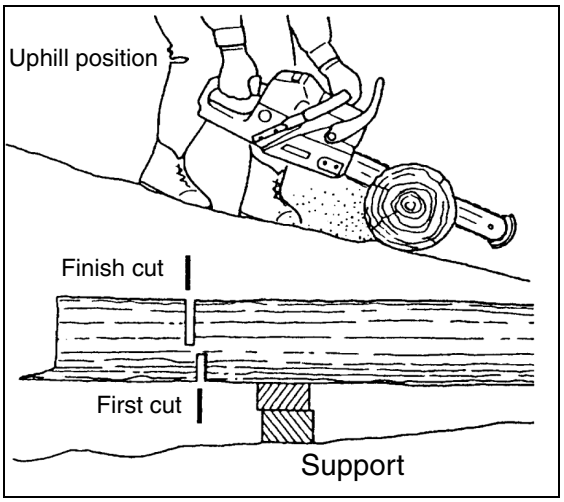

To cut the trunk, use the bucking and two-cut sequence shown. The first cut should be no deeper than one-third the trunk diameter.

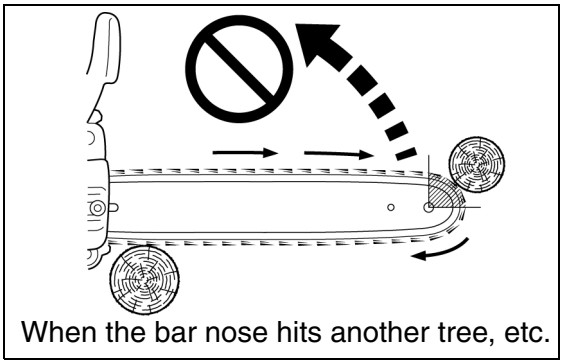

Chain And Guide Bar Combination

The following combinations are recommended for model CS-400F.

Guide Bar		Saw Chain		
Length mm (in.)	ECHO Part No. Low-kickback	Pitch mm (in.)	Type	Links
406 (16)	16A0CD3757	9.53 (3/8)	91PX / 91VG	57
457 (18)	18A0CD3762	9.53 (3/8)	91PX / 91VG	62

WARNING

Use of replacement saw chain and/or guide bar other than that specified, or operation without the "tip guard" in place, may cause severe kickback resulting in serious injury.Only use saw chain designated as, "LOW-KICKBACK," that meets ANSI B175.1 or CSA Z62.1, .3 Standard when tested on the representative sample of chain saws below 3.8 C.I.D., and Echo guide bar specified.

NOTICE

Chain and guide bar gauge size must be identical. Use Bar/Chain combinations shown in table above.

© 2/2017 ECHO Inc.

NOTICE

If your tip guard is damaged or lost, contact your Echo dealer for a replacement. For the name of the Echo dealer nearest you, Call: 1-800-432-ECHO (3246) or on the web at www.echo-usa.com.

Refer to your Chain Saw Safety Manual for tip guard application information.

Guide Bar

(Low-kickback)

Replacement guide bars.

The following guide bars may be considered to have equivalent kickback energy.

- Sprocket nose guide bars of the same length and nose radius, same pitch and having the same number of teeth.
- Hard nose guide bars of the same length and nose radius as a sprocket nose bar.

Saw Chain

(Low-kickback)

⚠ CAUTION

Do not use replacement saw chain unless it has been designated as meeting ANSI B175.1 or CSA Z62.1, .3 kickback performance requirements, when tested on the representative sample of chain saws below 3.8 c.i.d. specified in ANSI B175.1 or CSA 62.1, .3.

Note: LOW KICKBACK SAW CHAIN meets the kickback performance requirements of ANSI B175.1 or CSA 62.1, .3 (safety requirements for gasoline-powered chain saws).

MAINTENANCE

⚠ WARNING

Moving parts can amputate fingers or cause severe injuries. Keep hands, clothing and loose objects away from all openings. Always stop engine, disconnect spark plug, and make sure all moving parts have come to a complete stop before removing obstructions, clearing debris, or servicing unit. Allow unit to cool before performing service. Wear gloves to protect hands from sharp edges and hot surfaces.

Your ECHO unit is designed to provide many hours of trouble free service. Regular scheduled maintenance will help your unit achieve that goal. If you are unsure or are not equipped with the necessary tools, you may want to take your unit to an ECHO Service Dealer for maintenance. To help you decide whether you want to DO-IT-YOURSELF or have the ECHO Dealer do it, each maintenance task has been graded. If the task is not listed, see your ECHO Dealer for repairs.

Skill Levels

Level 1 = Easy to do. Common tools may be required.
Level 2 = Moderate difficulty. Some specialized tools may be required.

ECHO offers **REPOWER™** Maintenance Kits and Parts to make your maintenance job easier.

© 2/2017 ECHO Inc.

Maintenance Intervals

COMPONENT/SYSTEM	MAINTENANCE PROCEDURE	REQ'D SKILL LEVEL	DAILY OR BEFORE USE	EVERY REFUEL	3 MONTHS OR 90 HOURS	YEARLY 600 HOURS
Air Filter	Inspect/Clean	1	I / C *		R *	
Automatic Oiler	Inspect/Adjust	1	I			
Oil Filter	Inspect/Replace	1	I		I / C *	
Fuel System	Inspect/Replace	1	I (1) *	I (1) *		
Fuel Filter	Inspect/Replace	1			I *	I / R *
Fuel Cap Gasket	Replace	1			I *	R *
Guide Bar & Sprocket Nose	Inspect/Clean/Lubricate	1	I / C *	I		
Saw Chain	Inspect/Sharpen/Replace/ Tensioning	2	I *			
Sprocket	Inspect/Replace	2	I *			
Spark Plug	Inspect/Clean	1			I / C / R *	
Cooling System	Inspect/Clean	2	I / C			
Muffler Spark Arrestor	Inspect/Clean/Replace	2			I / C / R *	
Cylinder Exhaust Port	Inspect/Clean/Decarbon	2			I / C	
Recoil Starter Rope	Inspect/Clean	1	I / C *			
Screws/Nuts/Bolts	Inspect/Tighten/Replace	1	I *			

MAINTENANCE PROCEDURE LETTER CODES: I = INSPECT, R = REPLACE, C = CLEAN
IMPORTANT NOTE - Time intervals shown are maximum. Actual use and your experience will determine the frequency of required maintenance.

MAINTENANCE PROCEDURE NOTES:
(1) Low evaporative fuel tanks DO NOT require regular maintenance to maintain emission integrity.

* Replacement is recommended based on the finding of damage or wear during inspection.

Carburetor Adjustment

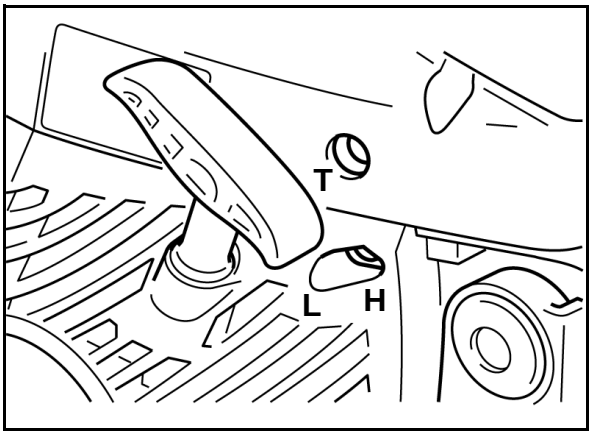

Every unit is run at the factory and the carburetor is set in compliance with Emission Regulations. In addition, the carburetor is equipped with "**H**" (High Speed) and "**L**" (Low Speed) needle adjustment limiters that prevent settings outside acceptable limits.

Engine Break-In

New engines must be operated a minimum duration of two tanks of fuel break-in before carburetor adjustments can be made. During the break-in period your engine performance will increase and exhaust emissions will stabilize. Idle speed can be adjusted as required.

High Altitude Operation

This engine has been factory adjusted to maintain satisfactory starting, emission, and durability performance up to 1,100 feet above sea level (ASL) (96.0 kPa). To maintain proper engine operation and emission compliance above 1,100 feet ASL the carburetor may need to be adjusted by an authorized service dealer.

© 2/2017 ECHO Inc.

NOTICE

If the engine is adjusted for operation above 1,100 feet ASL, the carburetor must be re-adjusted when operating the engine below 1,100 feet ASL, otherwise severe engine damage may result.

1. Before adjusting carburetor clean or replace air filter and muffler “Spark Arrestor Screen”.
2. Make sure the bar and chain are properly adjusted.
3. Start engine and run several minutes to bring to operating temperature. Flash choke twice during warm-up to clear any air from the fuel system.
4. Stop engine. Turn “**H**” speed needle counterclockwise (CCW) to stop. Turn “**L**” speed needle midway between full clockwise (CW) stop and CCW stop.
5. Idle Speed Adjustment:
   - Start engine, turn “Idle” speed adjustment screw “**T**” CW until the saw chain begins to move, then turn screw out CCW until the saw chain stops moving. Turn screw out, CCW, an additional 1/4 turn.

⚠ WARNING

When carburetor adjustment is completed, the saw chain should not move at idle, otherwise serious personal injury may result.

6. Accelerate to full throttle for 2 - 3 seconds to clear any excess fuel in the engine, then return to idle. Accelerate engine to full throttle to check for smooth transition from idle to high speed. If engine hesitates turn “**L**” needle CCW 1/8 turn and repeat acceleration. Continue adjustment until smooth acceleration results.
7. Check idle speed and reset if necessary as described in item 5. If a tachometer is available idle speed should be set to value listed on technical data page.

⚠ CAUTION

When starting, idling adjustment speed should be adjusted to prevent the saw chain from moving. When you experience trouble with the carburetor, contact your dealer.

Air Filter

1. Check before every use.
2. CLOSE ( ) choke.
3. Remove air cleaner cover (A) and air filter (B).
4. Lightly brush dust off air filter, or clean with compressed air, or replace the air filter.
5. Install air filter and cover.

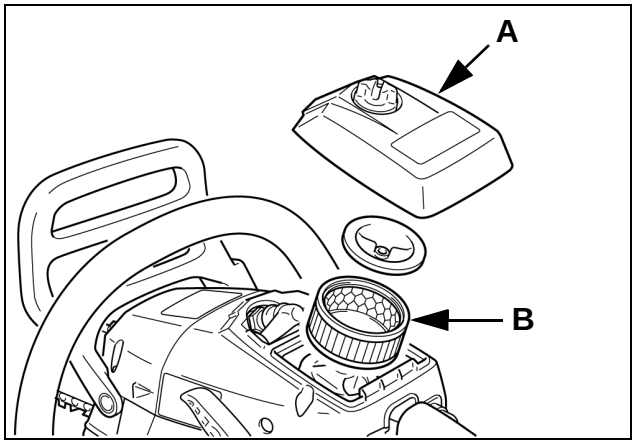

© 2/2017 ECHO Inc.

Spark Plug

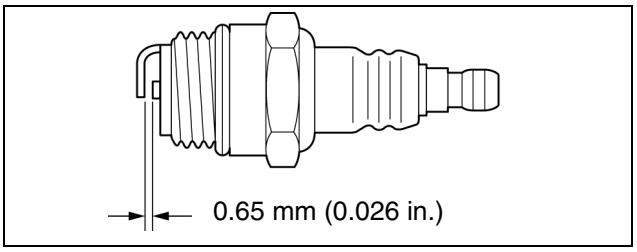

- Check periodically.
- The standard spark gap is 0.65 mm (0.026 in.).
- Fastening torque: 15-17 N•m (130-150 in•lbf).

1. Remove air cleaner cover and remove spark plug.
2. Correct the spark gap if it is wider or narrower than the standard gap.

Check Fuel System

- Check before every use.
- After refueling, make sure fuel does not leak from around fuel pipe, fuel grommet or fuel tank cap.
- In case of fuel leakage there is a danger of fire. Stop using the machine immediately and request your dealer to inspect or replace.

Fuel Filter

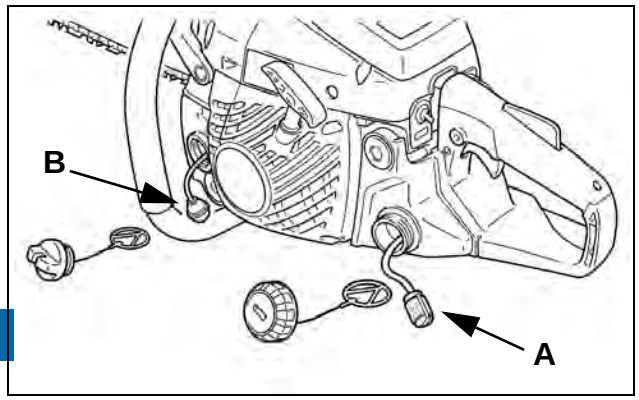

- Check periodically.
- Do not allow dust to enter fuel tank.
- A clogged filter (A) will cause difficulty in starting engine or abnormalities in engine performance.

1. Pull filter out through gas port, and inspect filter.

NOTICE

Do not damage fuel line while removing fuel filter from tank.

2. When the filter is dirty, replace it.
3. When the inside of the fuel tank is dirty, rinse the tank out with gasoline to clean it.

Note: Federal EPA regulations require all model year 2012 and later gasoline powered engines produced for sale in the United States to be equipped with a special low permeation fuel supply hose between the carburetor and fuel tank. When servicing model year 2012 and later equipment, only fuel supply hoses certified by EPA can be used to replace the original equipment supply hose. Fines up to $37,500 may be enforced for using an un-certified replacement part.

Automatic Oiler

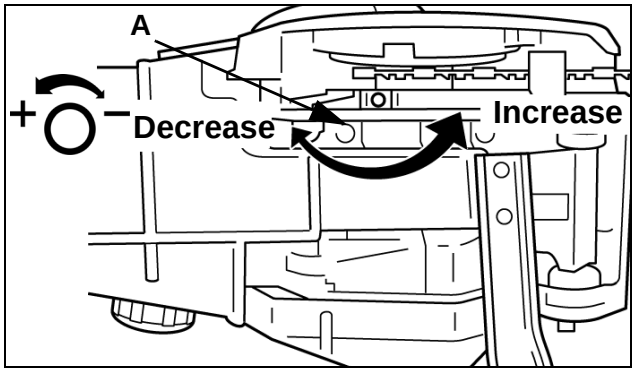

- The discharge volume of the automatic oiler is adjusted to approximately 4 mL/min at 7000 rpm, prior to shipment from factory.
- Always check oil discharge when in use.
- Turn adjusting screw (A) counterclockwise to increase oil volume, clockwise to decrease oil volume.
- Do not turn the adjusting screw beyond the maximum or minimum limit of volume adjustment.

© 2/2017 ECHO Inc.

Oil Filter

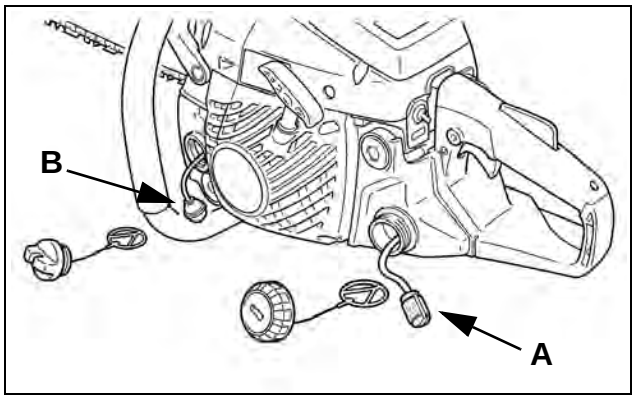

- Check periodically.
- Do not allow dust to enter into oil tank.
- A clogged oil filter (B) will affect the normal lubricating system.

1. Using a wire bent into the shape of a hook, pull filter out through oil port, and inspect filter.
2. If the filter is dirty, wash it in gasoline or replace it.
3. When the inside of the tank gets dirty, rinse the tank out with gasoline to clean it.

Guide Bar

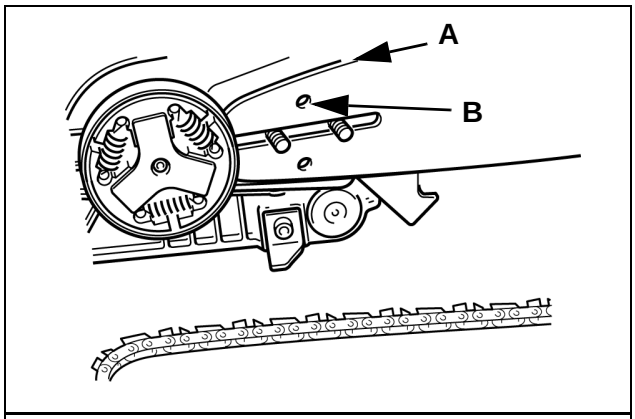

1. Clean before using.
2. Clean the groove (A) of the guide bar with a small screwdriver.
3. Clean oil holes (B) with a wire.
4. Invert guide bar periodically.
5. Clean the bar mount area before installing of the bar.

Sprocket

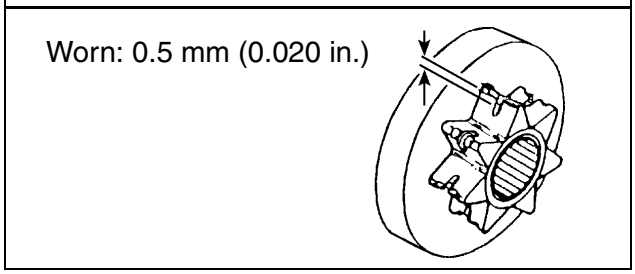

- A damaged sprocket will cause premature damage or wear of saw chain.
- When the sprocket has worn 0.5 mm (0.020 in.) or more, replace it.
- Check sprocket when you install new chain. Replace it if worn.

NOTICE

Some tree sap and resins are corrosive. Thoroughly wash the guide bar and sprocket areas after each use, then coat metal parts with light oil.

Cooling System Cleaning

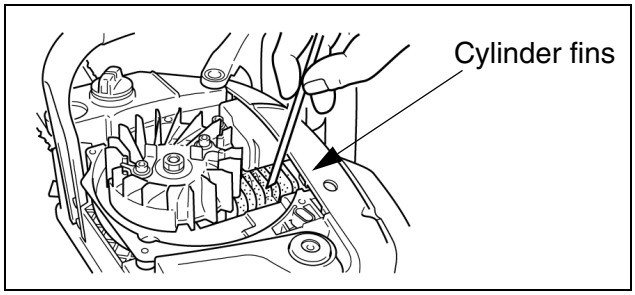

- Check periodically.
- Clogged fins will result in poor engine cooling.

1. Remove air cleaner cover, cylinder cover, and starter.
2. Use compressed air or wooden tool to remove dirt and dust from between fins to let cooling air pass easily.

Spark Arrestor Muffler

- The spark arrestor muffler controls the exhaust noise and prevents hot, glowing particles of carbon from leaving the muffler.

© 2/2017 ECHO Inc.

- Make sure the spark arrestor screen is in good repair and properly seated in the muffler.
- Certain internal combustion engines operated on forest, brush, and/or grass-covered areas in the states of Washington, Oregon, Idaho, California, Minnesota, New Jersey and Maine, are required to be equipped with a spark arrestor.

This requirement also applies to all U.S. Forest Service lands. In some of these areas, the spark arrestor system must be certified per USDA Forest Service Regulation SAE J335.

Check with your local or state authorities for specific regulations in your area. Failure to follow these requirements is a violation of the law.

Spark Arrestor Screen

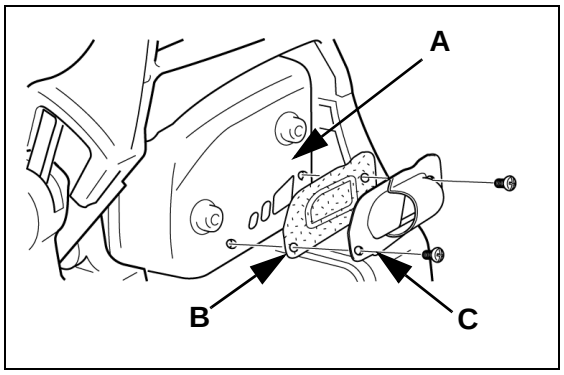

NOTICE

Carbon deposits in muffler will cause drop in engine output and overheating. Spark arrestor screen must be checked periodically.

1. Remove air cleaner cover and remove spark plug lead.
2. Remove spark arrestor cover (C) and screen (B) from muffler (A) body.
3. Clean carbon deposits from muffler components.
4. Replace screen if it is cracked, or has holes burned through.
5. Assemble components in reverse order.

Note: When cleaning carbon deposit, be careful not to damage the catalytic element inside muffler.

Exhaust Port Cleaning

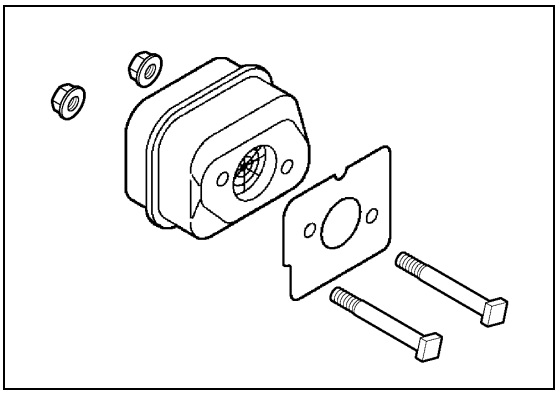

Level 2.

Parts Required: As needed: Muffler gasket

1. Remove air cleaner cover and remove spark plug lead.
2. Remove engine cover.
3. Place piston at top dead center.
4. Remove muffler. Check parts for wear or damage, and replace if necessary.

© 2/2017 ECHO Inc.

NOTICE

Never use a metal tool to scrape carbon from the exhaust port. Do not scratch the cylinder or piston when cleaning the exhaust port. Do not allow carbon particles to enter the cylinder.

5. Use a wood or plastic scraping tool to clean deposits from cylinder exhaust port.
6. Install muffler. Tighten muffler mounting bolts (or nuts) to 8-11 N•m (70-95 in•lbf).
7. Install engine cover and attach spark plug lead.
8. Replace air cleaner cover.
9. Start engine, and allow unit to warm up at idle for several minutes.
10. Stop engine, and re-tighten mounting bolts (or nuts) to 8-11 N•m (70-95 in•lbf).
11. Install guide bar and chain. Adjust chain tension.
12. Start engine and check for exhaust leaks between muffler and cylinder head. Stop engine if leak is found and correct problem before operating chain saw.

Setting The Saw Chain

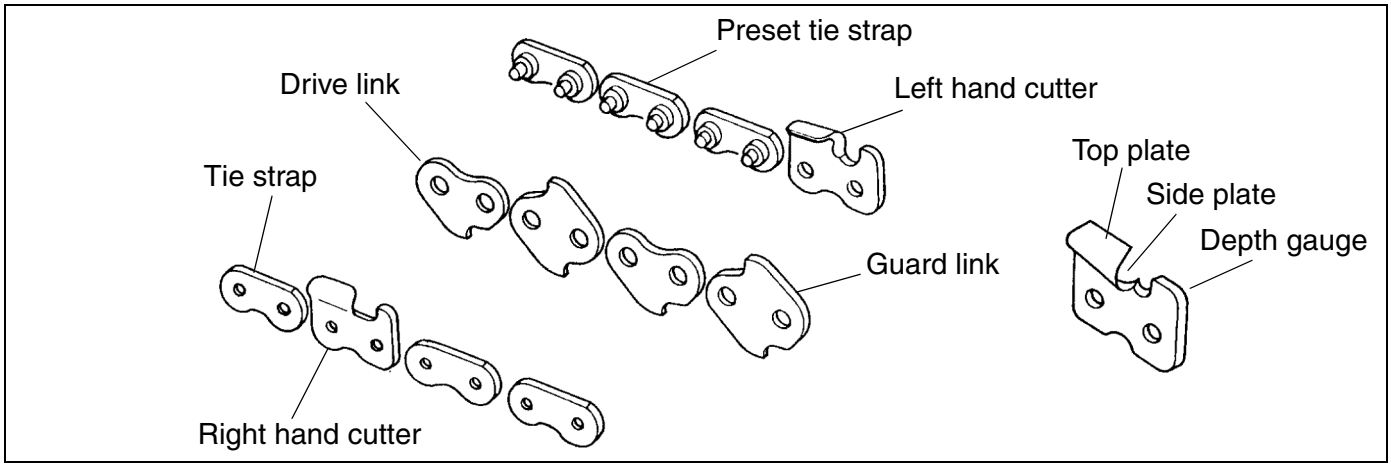

For more information scan this QR code.

Important points for proper maintenance of saw chain:

- Keep the cutters sharp at all times.
- Keep the left and the right cutters properly aligned.
- Note that blunt or irregular cutters will result in poor cutting performance, increased vibration of chains and premature breakage of the saw chain.

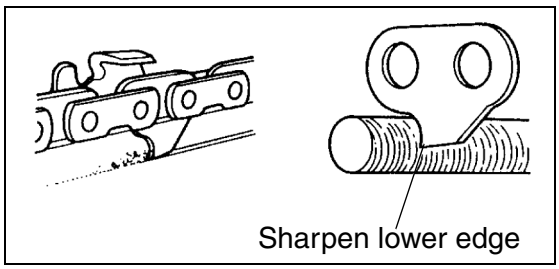

© 2/2017 ECHO Inc.

- Drive link serves to remove sawdust from the groove of the guide bar. Keep the lower edge of the drive link sharp where indicated.

Setting Saw Chain

- For setting saw chain, round file (4.0 mm [5/32 in.] diam.) and flat file are used.
- Push file as shown.

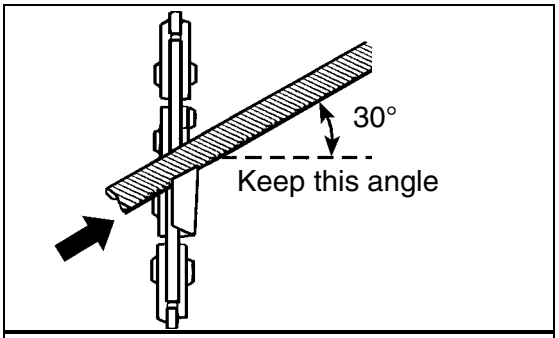

- To keep correct position and correct angle, use a file holder.
- Hold the file horizontally.

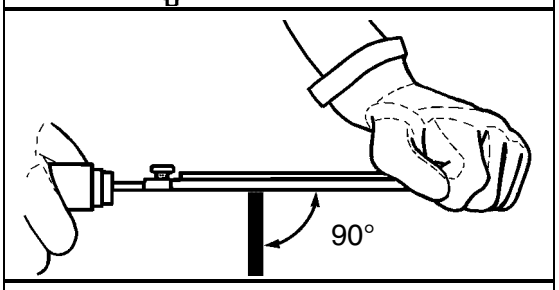

- Place the depth gauge tool firmly on guide bar so that depth gauge protrudes. Then file top of depth gauge with the flat file until flat with top of the depth gauge tool.
- One fifth of the file diameter remains above cutter edge.

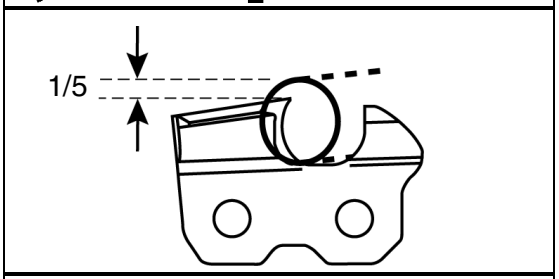

- Be sure to round off the front edge of the depth gauge.

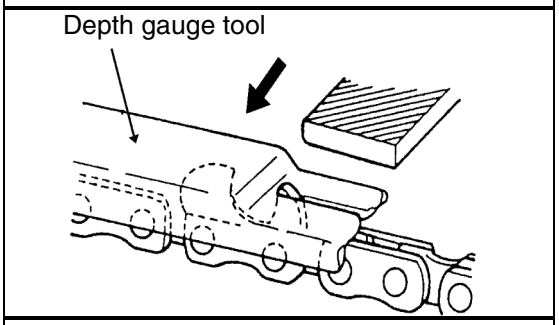

- Properly filed cutters are shown in illustration.

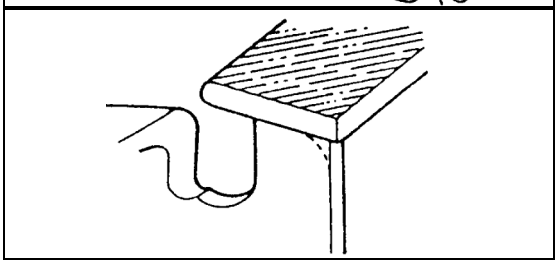

© 2/2017 ECHO Inc.

- When setting of the chain is finished, soak it in oil and wash away filings completely before using.
- When chain has been filed on the bar, supply sufficient oil to it, move the chain slowly to wash away the filings before using again.
- If the chain saw is operated with filings clogged in the groove, the saw chain and the guide bar will be damaged prematurely.
- If the saw chain becomes soiled with resin, for instance, clean it with kerosene and soak in it oil.

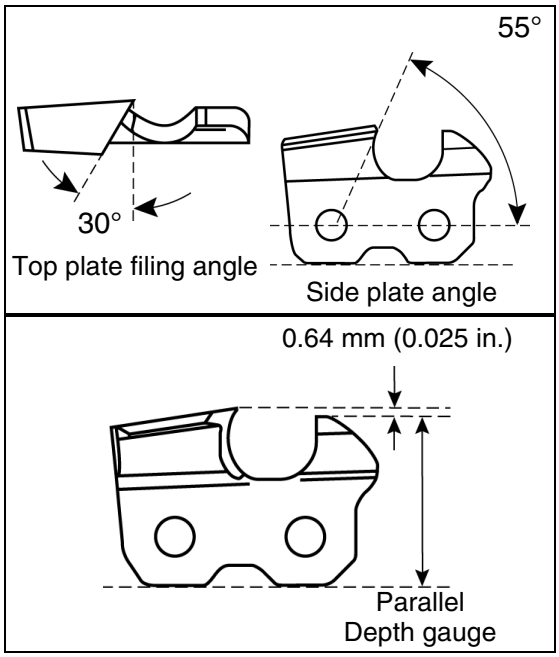

NOTICE

To sharpen other chains, follow chain manufacturer's instructions.

TROUBLESHOOTING

ENGINE PROBLEM TROUBLESHOOTING CHART				
Problem	**Check**	**Status**	**Cause**	**Remedy**
Engine cranks - starts hard/ doesn't start	Fuel at carburetor	No fuel at carburetor	Fuel strainer clogged Fuel line clogged Carburetor	Clean or replace Clean or replace See your Echo dealer
	Fuel at cylinder	No fuel at cylinder	Carburetor	See your Echo dealer
		Muffler wet with fuel	Fuel Mixture too rich	OPEN choke Clean/replace air filter Adjust carburetor See your Echo dealer
	Spark at end of plug wire	No spark	Stop switch OFF Electrical problem Interlock switch	Turn switch to ON See your Echo dealer See your Echo dealer
	Spark at plug	No spark	Spark gap incorrect Covered with carbon Fouled with fuel Plug defective	Adjust to 0.65mm (0.026 in.) Clean or replace Clean or replace Replace plug

© 2/2017 ECHO Inc.

ENGINE PROBLEM TROUBLESHOOTING CHART				
Problem	**Check**	**Status**	**Cause**	**Remedy**
Engine runs, but dies or does not accelerate properly	Air filter	Air filter dirty	Normal wear	Clean or replace
	Fuel filter	Fuel filter dirty	Contaminants/residues in fuel	Replace
	Fuel vent	Fuel vent plugged	Contaminants/residues in fuel	Clean or replace
	Spark Plug	Plug dirty/worn	Normal wear	Clean and adjust or replace
	Carburetor	Improper adjustment	Vibration	Adjust
	Cooling System	Cooling system dirty/plugged	Extended operation in dirty/dusty locations	Clean
	Spark Arrestor Screen	Spark arrestor screen plugged	Normal wear	Replace
Engine does not crank	N/A	N/A	Internal engine problem	See your Echo dealer

DANGER

Fuel vapors are extremely flammable and may cause fire and/or explosion. Never test for ignition spark by grounding spark plug near cylinder plug hole, otherwise serious personal injury may result.

STORAGE

Storage After Use

- Inspect and adjust every part of the chain saw.
  - Completely clean every part and repair if necessary.
  - Apply thin coating of oil on metal parts to prevent rust.
- Remove chain and guide bar.
- Drain fuel tank completely. Press purge bulb 6-7 times to remove remaining fuel from carburetor then drain the tank again. Close choke, start and run the engine until it stops due to lack of fuel.
- Allow engine to cool then remove the spark plug and pour 7 cc (1/4 oz.) of fresh, clean, two-stroke engine oil into the cylinder through the spark plug hole.
- Store in a dry area, free from dust.

WARNING

Do not store in an enclosure where fuel fumes may accumulate or reach an open flame or spark.

CAUTION

Do not lend or rent your chain saw without the Instruction manual and Safety manual.

Note:

- For future reference, you should keep this Instruction manual and the Safety manual.

© 2/2017 ECHO Inc.

- If this Instruction manual or the Safety manual has become illegible or is lost, please contact your ECHO dealer, or go to www.echo-usa.com.

© 2/2017 ECHO Inc.

TECHNICAL DATA

Model	CS-400F
Length	393 mm (15.5 in.)
Width	255 mm (10 in.)
Height	277 mm (10.1 in.)
Dry weight	4.7 kg (10.4 lb.) Without chain and guide bar
Engine	Air-cooled two-stroke single cylinder
Displacement	40.2 mL (2.45 cu. in.)
Bore	40.0 mm (1.58 in.)
Stroke	32.0 mm (1.259 in.)
Compressions ratio	6.5:1
Carburetor	Diaphragm type
Spark plug	NGK BPMR8Y
Fuel tank capacity	410 mL (13.9 US. fl. oz.)
Fuel	50:1 Power Blend X™ or ECHO Red Armor® ISO-L-EGD (ISO/CD 13738) and J.A.S.O. M345- FD, two-stroke, air-cooled engine oil.
Gasoline	Use 89 octane unleaded. Do not use fuel containing methyl alcohol, more than 10% ethyl alcohol or 15% MTBE. Do not use alternative fuels such as E15 or E85.
Oiling system	Adjustable automatic oiler
Chain oil capacity	280 mL (9.5 US. fl. oz.)
Starter system	Automatic rewind starter
Clutch	Centrifugal type
Sprocket type	Spur type, 6-tooth, 3/8 in. pitch
Chain brake	Automatic band brake type
Idle speed	2,700 RPM
Clutch engagement speed	4,100 RPM
Wide open throttle speed (W.O.T.)	12,000 RPM
Chain tensioner	Side access tool-less system
Guide bar	16, 18 in.
Saw chain	91PX/91VG
Standard features	Front hand guard, Rear hand guard, Anti-vibration device, Spiked bumper, Throttle control lockout, Chain catcher, Spark arrestor muffler, Tip guard

* Technical data subject to change without notice.

© 2/2017 ECHO Inc.

WARRANTY STATEMENTS

ECHO INCORPORATED LIMITED WARRANTY STATEMENT FOR
ECHO AND SHINDAIWA PRODUCTS SOLD IN USA AND CANADA BEGINNING 01/01/2010

ECHO INCORPORATED'S RESPONSIBILITY
ECHO Incorporated's (ECHO, Inc.) Limited Warranty, provides to the original purchaser that this ECHO or Shindaiwa product is free from defects in material and workmanship. Under normal use and maintenance from date of purchase, ECHO Inc. agrees to repair or replace at ECHO Inc.'s discretion, any defective product free of charge at any authorized ECHO or Shindaiwa servicing dealer (as applicable) within listed below application time periods, limitations and exclusions. **THIS LIMITED WARRANTY IS ONLY APPLICABLE TO ECHO AND SHINDAIWA PRODUCTS SOLD BY AUTHORIZED DEALERS. IT IS EXTENDED TO THE ORIGINAL PURCHASER ONLY, AND IS NOT TRANSFERABLE TO SUBSEQUENT OWNERS EXCEPT FOR EMISSION RELATED PARTS.** Repair parts and accessories replaced under this warranty are warranted only for the balance of the original unit or accessory warranty period. Any damage caused by improper installation or improper maintenance is not covered by this warranty. All parts or products replaced under warranty become the property of ECHO, Inc. This warranty is separate from and does not exclude or change the Emission control warranty statement that is supplied separately with your new product. Please consult the Emission Control Warranty Statement for details regarding emission related parts. For a list of Authorized ECHO Dealers refer to www.echo-usa.com or call **1-800-432-ECHO.** For a list of Authorized Shindaiwa Dealers refer to www.shindaiwa-usa.com or call **1-877-986-7783.**

OWNER'S RESPONSIBILITY
To ensure trouble free warranty coverage it is important that you register your ECHO or Shindaiwa equipment on-line at www.echo-usa.com or www.shindaiwa-usa.com, or by filling out the warranty registration card supplied with your unit. Registering your product confirms your warranty coverage and provides a direct link if we find it necessary to contact you.

The owner shall demonstrate reasonable care and use, and follow preventative maintenance, storage, fuel and oil usage as prescribed in the operator's manual. Should a product difficulty occur, you must, at your expense, deliver or ship your ECHO or Shindaiwa unit to an authorized servicing dealer for warranty repairs (within the applicable warranty period), and arrange for pick-up or return of your unit after the repairs have been made. For your nearest authorized ECHO servicing dealer, call ECHO's Dealer Referral Center, at 1-800-432-ECHO or you can locate an ECHO servicing dealer at www.echo-usa.com. For your nearest authorized Shindaiwa servicing dealer, call Shindaiwa's Dealer Referral Center, at 1-877-986-7783 or you can locate a Shindaiwa servicing dealer at www.shindaiwa-usa.com. Should you require assistance or have questions concerning this Warranty Statement, you can contact our Consumer Product Support Department at 1-800-673-1558. Contact us through the web at www.echo-usa.com, www.shindaiwa-usa.com, or Email us at support@echo-usa.com.

PRODUCT WARRANTY PERIOD

HOMEOWNER APPLICATION
- **5 YEAR WARRANTY -** All units for homeowner, or non-income producing use will be covered by this limited warranty for **five (5) years** from date of purchase.

  EXCEPTIONS:
  - For two-stroke engine powered products, the electronic ignition module, flexible drive cables, trimmer solid drive shafts, and TC tines are warranted for the **life*** of the product on parts only.
  - Cutting attachments such as, but not limited to, bars, chains, sprockets, blades, tines, belts, PowerBroom^{tm} and nylon trimmer heads for homeowner or non-income producing use will be covered for failures due to defects in material or workmanship for a period of **60 days** from original product purchase date. Any misuse from contact with concrete, rocks, or other structures is not covered by this warranty.
  - Rapid Loader String Head carries a lifetime warranty on the line locking system, parts only; no labor. Refer to your operator's manual for string head installation and maintenance instructions.
  - All SB-Series, Multipurpose Tool attachments, and PRO ATTACHMENT SERIES Split Shaft attachments carry the same warranty duration as the units they are designed to fit.

COMMERCIAL APPLICATION
- **1 YEAR WARRANTY -** All Chain Saws and Cut-Off Saws for commercial, institutional, agricultural, industrial, or income producing use will be covered by this limited warranty for one **(1) year** from the date of purchase.
- **2 YEAR WARRANTY -** All other units for commercial, institutional, agricultural, industrial, or income producing use will be covered by this limited warranty for two **(2) years** from the date of purchase.

  EXCEPTIONS:
  - For two-stroke engine powered products, the electronic ignition module, flexible drive cables, trimmer solid drive shafts and TC tines, are warranted for the **life*** of the product on parts only.
  - Cutting attachments such as, but not limited to, bars, chains, sprockets, blades, tines, belts, PowerBroom^{tm} and nylon trimmer heads for commercial, institutional, agricultural, industrial, rental, or income producing will be covered for failures due to defects in material or workmanship for a period of **30 days** from original product purchase date. Any misuse from contact with concrete, rocks, or other structures is not covered by this warranty.
  - Rapid Loader String Head carries a lifetime warranty on the line locking system, parts only; no labor. Refer to your operator's manual for string head installation and maintenance instructions.
  - All SB-Series, Multipurpose Tool attachments, and PRO ATTACHMENT SERIES Split Shaft attachments carry the same warranty duration as the units they are designed to fit.

RENTAL APPLICATION - 90 DAYS WARRANTY
- Units for rental use will be covered against defects in material and workmanship for a period of 90 days from the date of purchase.

* ECHO Inc.'s liability under the "Lifetime" coverage is limited to furnishing parts specified under the PRODUCT WARRANTY PERIOD section

© 2/2017 ECHO Inc.

of this warranty statement for **"Life"** free of charge for a period of ten (10) years after the date of the complete unit's final production.

ECHO Inc. does not offer an over the counter exchange program. Any product re-built or sold through an unauthorized dealer, or an unauthorized outlet store, is sold without ECHO Inc.'s limited warranty coverage. This Limited Warranty coverage is extended to the original purchaser only, and is not transferable except for emission related parts. Repair parts and accessories replaced under this warranty are warranted only for the balance of the original unit or accessory warranty period. Any damage caused by improper installation or improper maintenance is not covered by this warranty. All parts or products replaced under warranty become the property of ECHO Inc.

PURCHASED REPAIR PARTS, SHORT BLOCKS AND ACCESSORIES
- 90-day homeowner, or non-income producing warranty
- 30-day commercial, institutional, agricultural, industrial, income producing, or rental application warranty

ATTENTION TWO-STROKE ENGINE POWER PRODUCT OWNERS
Two-stroke engine power products are quality-engineered and manufactured to exact tolerances to provide superior performance. To help ensure the performance of the unit, it is required to use two-stroke oil which meets the ISO-L-EGD Standard per ISO/CD 13738 and JASO M345FD Standards. **ECHO Power Blend™ and Red Armor,™ and Shindaiwa Red Armor™** are premium two-stroke oils specifically formulated to meet ISO-L-EGD (ISO/CD 13738) and JASO M345FD Standards. The use of two-stroke oils designed for other applications, such as for outboard motors or lawnmowers can result in severe engine damage, and will void your two-stroke engine limited warranty.

THIS WARRANTY DOES NOT COVER DAMAGE CAUSED BY:
- Lack of lubrication or engine failure, due to the use of two-stroke oils that do not meet the ISO-L-EGD (ISO/CD 13738) and JASO M345FD Standards. Engine problems due to inadequate lubrication caused by failure to use an ISO-L-EGD compliant and JASO M345FD registered oil, will void the two-stroke engine limited warranty. ECHO Power Blend™ and Red Armor,™ and Shindaiwa Red Armor™ meet the ISO-L-EGD and JASO M345FD Standard. Emission related parts are covered for 5 years homeowner use or 2 years commercial use regardless of two-stroke oil used, per the statement listed in the EPA or California Emission Defect Warranty Explanation.
- Damage caused by use of gasohol, containing methanol (wood alcohol), or gasoline containing less than 89 octane. Only use gasoline which contains 89 octane or higher. Gasohol which contains a **maximum** 10% ethanol (grain alcohol) or 15% MTBE (methyl/tertiary/butyl/ether) is also approved. The prescribed mixing ratio of gasoline to oil is listed on the oil label and covered in your operator's manual.
- Engine damage caused by use of ether or any starting fluids.
- Damage caused by tampering with engine speed governor or emission components, or running engines above specified and recommended engine speeds as listed in your operator's manual.
- Operation of the unit with improperly maintained/removed cutting shield or removed/damaged air filter.
- Damage caused by dirt, pressure or steam cleaning the unit, salt water, corrosion, rust, varnish, abrasives, and moisture.
- Defects, malfunctions or failures resulting from abuse, misuse, neglect, modifications, alterations, normal wear, improper servicing, or use of unauthorized attachments.
- Incorrect storage procedures, stale fuel, including failure to provide or perform required maintenance services as prescribed in the operator's manual. Preventative maintenance as outlined in the operator's manual is the customer's responsibility.
- Failures due to improper set-up, pre-delivery service or repair service by anyone other than authorized servicing dealer during the warranty period.
- Certain parts and other items are not warranted, including but not limited to: lubricants, starter cords, and engine tune-ups.
- Use of spark plugs other than those meeting performance and durability requirements of the OEM spark plug listed in the Operator's Manuals.
- Overheating or carbon scoring failures due to restricted, clogged exhaust port or combustion chamber, including damage to spark arrester screen.
- Adjustments after the first (30) thirty days and beyond, such as carburetor adjustment and throttle cable adjustment.
- Damage to gears or gear cases caused by contaminated grease or oil, use of incorrect type or viscosity of lubricants, and/or failure to comply with recommended grease or oil change intervals.
- Damage caused by loading SHRED 'N' VAC® beyond recommended capacity.
- Damage caused by pump or sprayer running dry, pumping or spraying caustic or flammable materials, or lack of or broken strainers.
- Additional damage to parts or components due to continued use after operational problem or failure occurs. Should operational problem or failure occur, the product should not be used, but delivered as is to an authorized servicing dealer.

It is a dealer's and/or customer's responsibility to complete and return the warranty registration card supplied with your product or by visiting www.echo-usa.com or www. shindaiwa-usa.com. Your receipt of purchase including date, model and serial number must be maintained and presented to an authorized servicing dealer for warranty service. Proof of purchase rests solely with the customer. Some states do not allow limitations on how long an implied warranty lasts, so the above limitations may not apply to you. Some states do not allow the exclusion or limitation of incidental or consequential damages, so you may also have other specific legal rights which vary from state to state. This limited warranty is given by ECHO Incorporated, 400 Oakwood Rd., Lake Zurich, IL 60047.

DISCLAIMER OF IMPLIED WARRANTIES
This limited warranty is in lieu of all other expressed or implied warranties, including any warranty of FITNESS FOR A PARTICULAR PURPOSE OR USE and any implied warranty of **MERCHANTABILITY** otherwise applicable to this product. ECHO Inc. and its affiliated companies shall not be liable for any special incidental or consequential damage, including lost profits. There are no warranties extended other than as provided herein, except for the emission control warranty statement that is provided separately with the product when originally purchased. This limited warranty may be modified only by ECHO Inc.

X7562090701
11/28/2016

© 2/2017 ECHO Inc.

PRODUCT REGISTRATION

Thank you for choosing ECHO Power Equipment

Please go to http://www.echo-usa.com/Warranty/Register-Your-ECHO to register your new product on-line. It's ***FAST*** and ***EASY***! NOTE: your information will never be sold or misused by ECHO, Inc. Registering your purchase enables us to contact you in the unlikely event of a service update or product recall, and verifies your ownership for warranty consideration.

If you do not have access to the Internet, you can complete the form below and mail to:

ECHO Inc., Product Registration, PO Box 1139, Lake Zurich IL 60047.

ECHO PRODUCT REGISTRATION CARD : TARJETA DE REGISTRO : CARTE D'ENREGISTREMENT DU PRODUIT

ONLINE OPTION: Register online and save a stamp! You will be alerted of product updates and/or be sent new ECHO product information and special offers. Simply go to: **www.echo-usa.com**

OPCIÓN POR INTERNET: ¡Regístrese en la pagina web y ahorre una estampilla! Le alertarán sobre actualizaciones del producto y/o se le enviara información sobre los nuevos productos ECHO y las ofertas especiales. Simplemente visite: **www.echo-usa.com**

OPTION EN LIGNE : Enregistrer en ligne et épargner un timbre! Vous serez informé sur les nouveaux produits ECHO et les mises à jour de produit ainsi que les offres spéciales. Simplement visitez le: **www.echo-usa.com**

Please Print : Por Favor Enscriba Con Letra De Molde : En Lettre Carré S.V.P.

Confidential: Information provided will not be shared or sold

Purchaser's Name : Nombre del Comprador : Nom de l'acheteur

Address : Dirección : Adresse

City : Ciudad : Ville | *State : Estado : Province* | *Zip Code : Código Postal : Code Postal*

E-Mail Address : Dirección De Correo Electrónico : Courrier Électronique

Phone Number : Número De Teléfono : Téléphone | *Date of Purchase : Fecha de la Compra : Date de l'achat*

Where Purchased : Nombre del Almacén donde fue Comprado : Lieu d'achat

Model Number : Numero del Modelo : No. de modèle | *Serial Number : Numero de Serie : No. de série*

Registering your purchase enables us to contact you in the unlikely event of a service update or product recall and verifies your ownership in the event of loss. Registrar su compra nos permite estar en contacto con usted en caso de cualquier evento como el aviso de servicio o la revocación de productos o verificación de propiedad en caso de pérdida. L'enregistrement de votre achat nous permettra de vous contacter dans le cas improbable de modifications des instructions d'entretien ou de rappel du produit et vérifier que vous êtes le propriétaire en cas de vol ou de perte.

Primary use of tool: ☐ Professional ☐ Homeowner ☐ Rental Equip.
Uso primario de la herramienta: ☐ Profesional ☐ Dueño de casa ☐ Alquiler
Usage principal : ☐ Professionnel ☐ Residential ☐ Location

Do you wish to receive periodic ECHO product information and special offers by e-mail? ☐ Yes ☐ No
¿Desea usted recibir información periódica y ofertas especiales por correo electronico sobre el producto ECHO? ☐ Yes ☐ No
Souhaitez-vous recevoir périodiquement de l'information sur les produits ECHO et les offres spéciales par courrier électronique ? ☐ Oui ☐ Non

Did you visit the ECHO website before purchasing your product?
☐ Yes ☐ No
Visitó usted la pagina web ECHO antes de comprar su producto?
☐ Si ☐ No
Avez-vous visité le site d'ECHO avant de procurer votre produit?
☐ Oui ☐ Non

What factor(s) most influenced your purchase?
☐ Performance ☐ Price ☐ Dealer
☐ Reliability ☐ Prior Experience ☐ Quality
☐ Friend/Family ☐ Brand ☐ Warranty
¿Qué factor(es) influenció más en su compra?
☐ Funcionamiento ☐ Precio ☐ Distribuidor
☐ Confiabilidad ☐ Experiencia Anterior ☐ Calidad
☐ Amigo/Familia ☐ Marca ☐ Garantía
Quel facteur (facteurs) vous a influencé le plus?
☐ Performance ☐ Prix ☐ Marchand
☐ Fiabilité ☐ Expérience ☐ Qualité
☐ Ami/Famille ☐ Marque ☐ Garantie

ECHO INC., 400 Oakwood Rd., Lake Zurich, IL 60047
1.800.432.ECHO WWW.ECHO-USA.COM

X7572270206 02-2012

© 2/2017 ECHO Inc.

NOTES

© 2/2017 ECHO Inc.

SERVICING INFORMATION

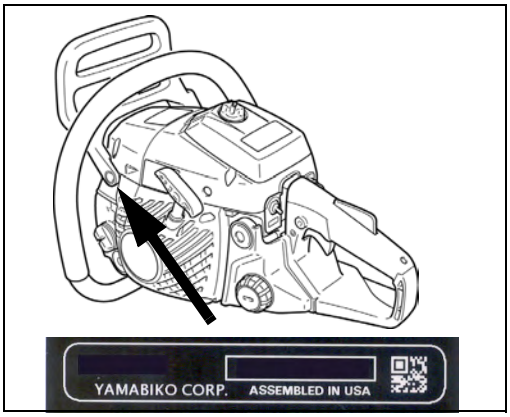

Parts/Serial Number

Genuine ECHO Parts and ECHO REPOWER™ Parts and Assemblies for your ECHO products are available only from an Authorized ECHO Dealer. When you do need to buy parts **always** have the Model Number and Serial Number of the unit with you. You can find these numbers on the engine housing. For future reference, write them in the space provided below.

Model No. _____ SN. _____

Service

Service of this product during the warranty period must be performed by an Authorized ECHO Service Dealer. For the name and address of the Authorized ECHO Service Dealer nearest you, ask your retailer or call: 1-800-432-ECHO (3246). Dealer information is also available on our Web Site. When presenting your unit for Warranty service/repairs, proof of purchase is required.

Echo Consumer Product Support

If you require assistance or have questions concerning the application, operation or maintenance of this product you may call the ECHO Consumer Product Support Department at 1-800-673-1558 from 8:00 am to 5:00 pm (Central Standard Time) Monday through Friday. Before calling, please know the model and serial number of your unit.

Product Registration

To ensure trouble free warranty coverage it is important that you register your ECHO equipment on-line at www.echo-usa.com or by filling out the product registration sheet included in this manual. Registering your product confirms your warranty coverage and provides a direct link between you and ECHO if we find it necessary to contact you.

Additional or Replacement Manuals

Replacement Operator, Safety Manuals, and Parts Catalogs are available from your ECHO dealer or at www.echo-usa.com or by contacting ECHO Inc., 400 Oakwood Road, Lake Zurich, IL 60047 (800-673-1558). Always check the ECHO Web Site for updated information.

For more information scan this QR code.

Safety Videos are available from your Echo dealer. A $5.00 shipping charge will be required for each video.

© 2/2017 ECHO Inc.

ECHO, INCORPORATED
400 Oakwood Road
Lake Zurich, IL 60047
www.echo-usa.com

C69815001001 - C69815999999