ENGLISH

SRM-225
GRASS TRIMMER / BRUSH CUTTER
Operator's Manual

⚠ WARNING

Burn Hazard

The muffler or catalytic muffler and surrounding cover may become extremely hot. Always keep clear of exhaust and muffler area, otherwise serious personal injury may occur.

⚠ WARNING

The engine exhaust from this product contains chemicals known to the State of California to cause cancer, birth defects, or other reproductive harm.

⚠ WARNING

Users of this equipment risk injury to themselves and others if the unit is used improperly and/or safety precautions are not followed. Echo provides an operator's manual and a safety manual. Both must be read and understood for proper and safe operation. Failure to do so could result in serious injury.

Specifications, descriptions and illustrative material in this literature are as accurate as known at the time of publication, but are subject to change without notice. Illustrations may include optional equipment and accessories, and may not include all standard equipment.

X7732276400

© 7/2017 ECHO Inc.

TABLE OF CONTENTS

Table of Contents 2
Introduction 3
Servicing Information 3
Parts/Serial Number 3
Service 3
Echo Consumer Product Support 4
Product Registration 4
Additional or Replacement Manuals 4
Safety 4
Manual Safety Symbols and Important Information 4
International Symbols 5
Personal Condition and Safety Equipment 7
Equipment 11
Emission Control (Exhaust & Evaporative) 12
CARB And EPA Emissions Control Information 12
Description 14
Contents 17
Assembly 18
Support Handle Installation 18
Operation 18
Operation With Blades 19
Blade Selection 20
Fuel 21
Starting Cold Engine 24
Starting Warm Engine 25
Stopping Engine 26
Maintenance 27
Skill Levels 27
Maintenance Intervals 27
Air Filter 29
Fuel Filter 29
Spark Plug 30
Cooling System 31
Exhaust System 32
Carburetor Adjustment 34
Lubrication 35
Nylon Line Head Disassembly Instructions 36
Nylon Line Replacement 37
Sharpening Metal Blades 38
Troubleshooting 40
Storage 41
Long Term Storage (Over 30 Days) 41
Specifications 43
Product Registration 44
Notes 46

© 7/2017 ECHO Inc.

INTRODUCTION

Welcome to the ECHO family. This ECHO product was designed and manufactured to provide long life and on-the-job dependability. Read and understand this manual and the safety manual. Keep the manuals in a safe place for future reference.

The operators manual contains specifications and information for safety, operation, maintenance, storage and assembly specific to this product. Scan the QR codes throughout the operator's manual for more information.

The safety manual explains possible hazards and the measures you should take to insure safe operation.

ENGLISH

SERVICING INFORMATION

Parts/Serial Number

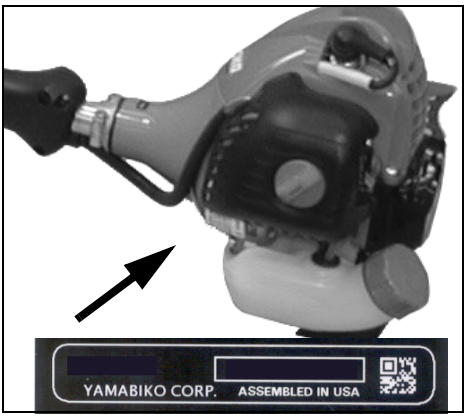

Genuine ECHO Parts and Assemblies for your ECHO products are available only from an Authorized ECHO Dealer. When you do need to buy parts always have the Model Number and Serial Number of the unit with you. For future reference write them in the space provided below.

Model No. _____

Serial No. _____

Service

Service of this product during the warranty period must be performed by an Authorized ECHO Service Dealer. For the name and address of the Authorized ECHO Service Dealer nearest you, ask your retailer or call: 1-800-432-ECHO (3246). Dealer information is also available on our Web Site www.echo-usa.com. When presenting your unit for Warranty service/ repairs, proof of purchase is required.

© 7/2017 ECHO Inc.

Echo Consumer Product Support

If you require assistance or have questions concerning the application, operation, or maintenance of this product, call the ECHO Consumer Product Support Department at 1-800-673-1558 from 8:00 am to 5:00 pm (Central Standard Time) Monday through Friday. Before calling, please know the model and serial number of your unit.

Product Registration

Register your ECHO equipment on-line at www.echo-usa.com or by filling out the product registration sheet included in this manual. Registering your product confirms warranty coverage and provides a direct link to ECHO if we find it necessary to contact you.

Additional or Replacement Manuals

Replacement Operator or Safety Manuals, and Parts Catalogs, are available from your Authorized ECHO Service Dealer, or at www.echo-usa.com, or by contacting ECHO Inc., 400 Oakwood Road, Lake Zurich, IL 60047 (800-673-1558). Always check www.echo-usa.com for updated information.

Safety Videos are available from your Authorized ECHO Service Dealer. A $5.00 shipping charge is required for each video.

SAFETY

Manual Safety Symbols and Important Information

Throughout this manual and on the product itself, you will find safety alerts and helpful, informational messages preceded by symbols or key words. The following is an explanation of those symbols and key words and what they mean to you.

⚠ DANGER

The safety alert symbol accompanied by the word "DANGER" calls attention to an act or condition which WILL lead to serious personal injury or death if not avoided.

© 7/2017 ECHO Inc.

ENGLISH

⚠ WARNING

The safety alert symbol accompanied by the word "WARNING" calls attention to an act or condition which CAN lead to serious personal injury or death if not avoided.

⚠ CAUTION

The safety alert symbol accompanied by the word "CAUTION" calls attention to an act or condition which may lead to minor or moderate personal injury if not avoided.

NOTICE

The enclosed message provides information necessary for the protection of the unit.

Note: This enclosed message provides tips for use, care and maintenance of the unit.

CIRCLE AND SLASH SYMBOL
This symbol means the specific action shown is prohibited. Ignoring these prohibitions can result in serious or fatal injury.

International Symbols

Symbol	Description	Symbol	Description
	Warning, See Operator's Manual	H	Carburetor Adjustment - High Speed Mixture
	Wear Eye, Ear and Head Protection	T	Carburetor Adjustment - Idle Speed
	Wear Hand and Foot Protection	L	Carburetor Adjustment - Low Speed Mixture
	Safety/Alert	STOP	Emergency Stop

© 7/2017 ECHO Inc.

Symbol	Description	Symbol	Description
	Hot Surface		Fuel and Oil Mixture
		AVOID KICKOUT Keep Bystanders At Least 15 m (50 ft.) Away.	
		Beware Thrown Objects Wear Eye Protection	
	DO NOT Allow Flames or Sparks Near Fuel	Ignition ON I OFF O	Ignition ON / OFF
	DO NOT Smoke Near Fuel		Primer Bulb
	Choke Control “RUN” Position (Choke Open)		Choke Control “COLD START” Position (Choke Closed)
	Keep Feet Away From Blade		Rotating Cutting Attachment
360° 15m(50ft)		Keep Bystanders and Helpers Away 15 m (50 ft.)	
	Thrown Objects		Direction of Blade

© 7/2017 ECHO Inc.

Personal Condition and Safety Equipment

WARNING

Users of this product risk injury to themselves and others if the unit is used improperly and/or safety precautions are not followed. Proper clothing and safety gear must be worn when operating unit.

Physical Condition

Your judgment and physical dexterity may not be good:

- If you are tired or sick
- If you are taking medication
- If you have taken alcohol or drugs

Operate unit only if you are physically and mentally well.

Eye Protection

WARNING

- **Eye protection that meets ANSI Z87.1 or CE requirements must be worn whenever you operate the unit.**
- **For additional safety, a full-face shield may be worn over safety glasses or goggles to provide protection from sharp branches or flying debris.**

© 7/2017 ECHO Inc.

Hand Protection

Wear sturdy, no-slip, rubber work gloves to improve your grip on the handles. Gloves also provide protection against cuts and scratches, cold environments, and reduce the transmission of machine vibration to your hands.

Hearing/Ear Protection

ECHO recommends wearing hearing protection whenever unit is used.

Breathing Protection

Operators who are sensitive to dust or other common airborne allergens may need to wear a dust mask to prevent inhaling these materials while operating unit. Dust masks can provide protection against dust, plant debris, and other plant matter such as pollen. Make sure the mask does not impair your vision, and replace the mask as needed to prevent air restrictions.

Proper Clothing

Wear snug-fitting, durable clothing:

- Pants should have long legs, shirts should have long sleeves.
- DO NOT WEAR SHORTS.
- DO NOT WEAR TIES, SCARVES, JEWELRY, or clothing with loose or hanging items that could become entangled in moving parts or surrounding growth.
- Keep clothing buttoned or zipped, and keep shirt tails tucked in.

Wear sturdy work shoes with nonskid rubber soles:

- DO NOT WEAR OPEN TOED SHOES.
- DO NOT OPERATE UNIT BAREFOOTED.

Keep long hair away from engine and air intake. Retain hair with cap or net.

Heavy protective clothing can increase operator fatigue, which may lead to heat stroke. Schedule heavy work for early morning or late afternoon hours when temperatures are cooler.

© 7/2017 ECHO Inc.

ENGLISH

⚠ WARNING

The components of this machine generate an electromagnetic field during operation, which may interfere with some pacemakers. To reduce the risk of serious or fatal injury, persons with pacemakers should consult with their physician and the pacemaker manufacturer before operating this machine. In the absence of such information, ECHO does not recommend the use of this machine by anyone who has a pacemaker.

Extended Operation / Extreme Conditions

⚠ CAUTION

Prolonged exposure to cold and/or vibration may result in injury. Read and follow all safety and operation instructions to minimize risk of injury. Failure to follow instructions may result in painful wrist/hand/arm injuries.

It is believed that a condition called Raynaud's Phenomenon, which affects the fingers of certain individuals, may be brought about by exposure to vibration and cold. Exposure to vibration and cold may cause tingling and burning sensations, followed by loss of color and numbness in the fingers. The following precautions are strongly recommended, because the minimum exposure, which might trigger the ailment, is unknown.

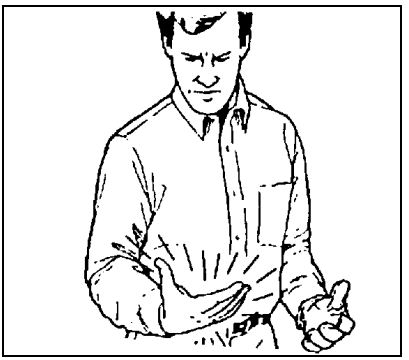

- Keep your body warm, especially the head, neck, feet, ankles, hands, and wrists.
- Maintain good blood circulation by performing vigorous arm exercises during frequent work breaks, and also by not smoking.
- Limit the hours of operation. Try to fill each day with jobs where operating the unit or other hand-held power equipment is not required.
- If you experience discomfort, redness, and swelling of the fingers followed by whitening and loss of feeling, consult your physician before further exposing yourself to cold and vibration.

© 7/2017 ECHO Inc.

Repetitive Stress Injuries (RSI)

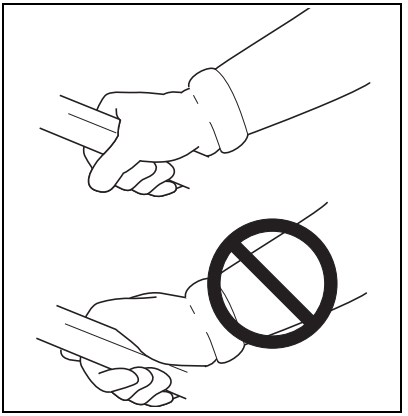

It is believed that overusing the muscles and tendons of the fingers, hands, arms, and shoulders may cause soreness, swelling, numbness, weakness, and extreme pain in those areas. Certain repetitive hand activities may put you at a high risk for developing a Repetitive Stress Injury (RSI). An extreme RSI condition is Carpal Tunnel Syndrome (CTS), which could occur when your wrist swells and squeezes a vital nerve that runs through the area. Some believe that prolonged exposure to vibration may contribute to CTS. CTS can cause severe pain for months or even years.

To reduce the risk of RSI/CTS, do the following:

- Avoid using your wrist in a bent, extended, or twisted position. Instead try to maintain a straight wrist position. Also, when grasping, use your whole hand, not just the thumb and index finger.
- Take periodic breaks to minimize repetition and rest your hands.
- Reduce the speed and force with which you do the repetitive movement.
- Do exercises to strengthen the hand and arm muscles.
- Immediately stop using all power equipment and consult a doctor if you feel tingling, numbness, or pain in the fingers, hands, wrists, or arms. The sooner RSI/CTS is diagnosed, the more likely permanent nerve and muscle damage can be prevented.

⚠ DANGER

All over head electrical conductors and communications wires can have electricity flow with high voltages. This unit is not insulated against electrical current. Never touch wires directly or indirectly, otherwise serious injury or death may result.

⚠ DANGER

Do not operate this product indoors or in inadequately ventilated areas. Engine exhaust contains poisonous emissions and can cause serious injury or death.

© 7/2017 ECHO Inc.

Read the Manuals

- Provide all users of this equipment with the Operator's Manual and Safety Manual for instructions on Safe Operation.

Clear the Work Area

- Spectators and fellow workers must be warned, and children and animals prevented from coming nearer than 15 m (50 ft.) while the unit is in use.

Keep a Firm Grip

- Always hold throttle handle and support handle with thumbs and fingers tightly encircling the handles.

Keep a Solid Stance

- Maintain footing and balance at all times. Do not stand on slippery, uneven or unstable surfaces. Do not work in odd positions or on ladders. Do not over reach.

Avoid Hot Surfaces

- Keep exhaust area clear of flammable debris. Avoid contact during and immediately after operation.

Equipment

WARNING

Use only ECHO attachments. Serious injury may result from the use of a non-approved attachment combination. ECHO, INC. will not be responsible for the failure of cutting devices, attachments or accessories which have not been tested and approved by ECHO. Read and comply with all safety instructions listed in this manual and safety manual.

- **Check unit for loose or missing nuts, bolts, and screws. Tighten or replace as needed.**
- **Inspect shield for damage and ensure that the cut-off knife is securely in place. Replace if either is damaged or missing.**
- **Check that the cutting attachment is firmly attached and in safe operating condition.**

© 7/2017 ECHO Inc.

- **Check that handle and harness (if included) are adjusted for safe, comfortable operation. See Assembly Section for proper adjustment.**

⚠ WARNING

Moving parts can amputate fingers or cause severe injuries. Keep hands, clothing and loose objects away from all openings.

- **ALWAYS stop engine, disconnect spark plug, and make sure all moving parts have come to a complete stop before removing obstructions, clearing debris, or servicing unit.**
- **DO NOT start or operate unit unless all guards and protective covers are properly assembled to unit.**
- **NEVER reach into any opening while the engine is running. Moving parts may not be visible through openings.**

⚠ WARNING

Periodically Check fuel system (fuel lines, vent, grommet, fuel tank, and fuel cap) for leaks especially if the unit is dropped. If damage or leaks are found, do not use unit, otherwise serious personal injury or property damage may occur. Have unit repaired by an authorized servicing dealer before using.

© 7/2017 ECHO Inc.

EMISSION CONTROL (EXHAUST & EVAPORATIVE)

CARB And EPA Emissions Control Information

EMISSION CONTROL INFORMATION
ENGINE FAMILY: Z EHXS.0214EQ DISPLACEMENT: 21.2cc
EMISSION COMPLIANCE PERIOD: 50Hours
THIS ENGINE MEETS 2013 U.S.EPA EXH/EVP & CALIFORNIA
EXH/EVP EMISSION REGULATIONS FOR S.O.R.E. REFER TO OWNER'S
MANUAL FOR MAINTENANCE SPECIFICATIONS AND ADJUSTMENTS.
YAMABIKO CORP. MMM/YYYY E

The emission control system for the engine is EM (engine modification) and, if the second to last character of the Engine Family on the Emission Control Information label (sample below) is “B”, “C”, “K”, or “T”, the emission control system is EM and TWC (3-way catalyst). The fuel tank/fuel line emission control system is EVAP (evaporative emissions). Evaporative emissions for California models are only applicable to fuel tanks.

An Emission Control Label is located on the engine. (This is an EXAMPLE ONLY, information on label varies by engine FAMILY).

EMISSION CONTROL INFORMATION
ENGINE FAMILY: CEHXS.0214KL DISPLACEMENT: 21.2cc
EMISSION COMPLIANCE PERIOD: 300Hours
THIS ENGINE MEETS 2012 U.S. EPA EXH/EVP & CALIFORNIA
EXH/EVP EMISSION REGULATIONS FOR S.O.R.E. REFER TO OWNER'S
MANUAL FOR MAINTENANCE SPECIFICATIONS AND ADJUSTMENTS.
YAMABIKO CORP. MMM/YYYY E

Product Emission Durability (Emission Compliance Period)

The 50 or 300 hour emission compliance period is the time span selected by the manufacturer certifying the engine emissions output meets applicable emissions regulations, provided that approved maintenance procedures are followed as listed in the Maintenance Section of this manual.

© 7/2017 ECHO Inc.

DESCRIPTION

Locate the safety decal(s) on your unit. Make sure the decal(s) is legible and that you understand and follow the instructions on it. If a decal cannot be read, a new one can be ordered from your ECHO dealer. See PARTS ORDERING instructions for specific information.

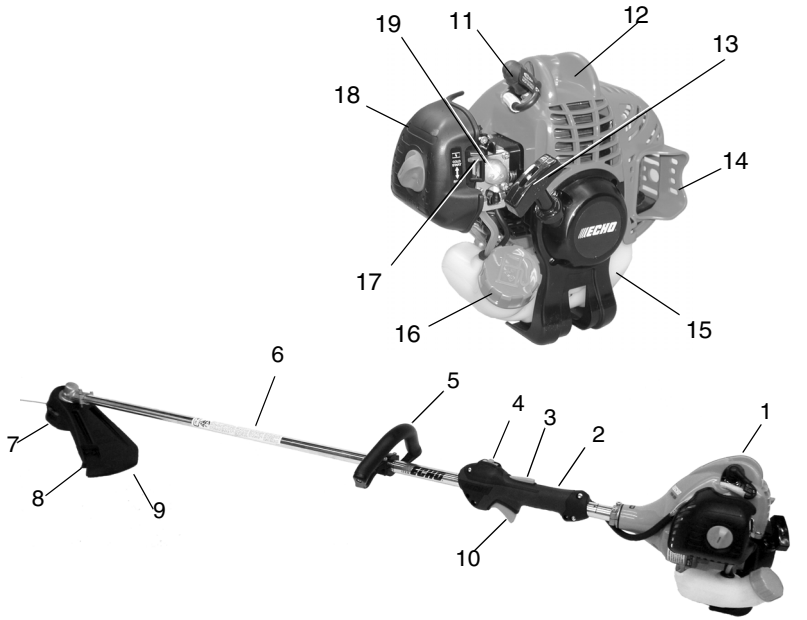

Hot Label

Shaft Label

© 7/2017 ECHO Inc.

1. **POWER HEAD** - Includes the Engine, Clutch, Fuel System, Ignition System and Recoil Starter.
2. **THROTTLE HANDLE - FOR RIGHT HAND** - Contains Stop Switch, Throttle Lockout, and Throttle Trigger.
3. **THROTTLE TRIGGER LOCKOUT** - This lever must be held during starting. Operation of the throttle trigger is prevented unless throttle trigger lockout lever is engaged
4. **STOP SWITCH** - "SLIDE SWITCH" mounted on top of the Throttle Handle. Move switch FORWARD to RUN, BACK to STOP.
5. **SUPPORT HANDLE - FOR LEFT HAND** - The support handle is factory assembled to the Drive Shaft assembly but must be re-positioned for proper cutting attitude and operator comfort.
6. **DRIVE SHAFT ASSEMBLY** - Includes the Throttle Handle, Gear Housing assembly, Support Handle, Drive Shaft and Safety Decal.
7. **NYLON CUTTER HEAD** - Contains replaceable nylon trimming line that advances when the trimmer head is tapped against the ground while the head is turning at normal operating speed.
8. **CUT-OFF KNIFE** - Automatically trims line to the correct length: 13 cm (5 inches) after head is tapped on the ground. If trimmer is operated without a cut-off knife, the line will become too long, the engine will overheat, and engine damage may occur.
9. **DEBRIS SHIELD with CUT-OFF KNIFE** - Required when unit is equipped with nylon line head. Do not operate unit without shield.
10. **THROTTLE TRIGGER** - Spring loaded to return to idle when released. During acceleration, press trigger gradually for best operating technique.
11. **SPARK PLUG** - Provides spark to ignite fuel mixture.
12. **ARM REST** - Provides arm rest during operation and protects arm from the hot engine.
13. **RECOIL STARTER HANDLE** - Pull handle slowly until starter engages, then quickly and firmly. When engine starts, return handle slowly. DO NOT let handle snap back or damage to unit will occur
14. **SPARK ARRESTOR MUFFLER OR SPARK ARRESTOR MUFFLER WITH CATALYST -**The muffler or catalytic muffler controls exhaust noise and emission. The spark arrestor screen prevents hot, glowing particles of carbon from leaving the muffler. Keep exhaust area clear of flammable debris
15. **FUEL TANK** - Contains fuel and fuel filter.
16. **FUEL TANK CAP** - Covers and seals fuel tank opening
17. **CHOKE** - The choke control is located at the rear of the air cleaner housing. Move choke lever to COLD START (|⊸|) to close choke for cold start. Move choke lever to "RUN" (|↕|) position to open choke.

© 7/2017 ECHO Inc.

18. **AIR CLEANER** - Contains replaceable filter element.
19. PURGE BULB - Pumping purge bulb before starting engine draws fresh fuel from the fuel tank, purging air from the carburetor. Pump purge bulb until fuel is visible and flows freely in the clear fuel tank return line. Pump purge bulb an additional 4 or 5 times.

© 7/2017 ECHO Inc.

CONTENTS

The ECHO product you purchased has been factory pre-assembled for your convenience. Due to packaging restrictions, some assembly may be necessary.

After opening the carton, check for damage. Immediately notify your retailer or ECHO Dealer of damaged or missing parts. Use the contents list to check for missing parts.

_____ 1 - Power Head / Drive Shaft Assembly

_____ 1 - Operator's Manual

_____ 1 - Safety Manual

_____ 1 - Warranty Statement

_____ 1 - Safety Glasses

_____ 1 - Echo Power Blend X™ 2-Stroke Oil Sample

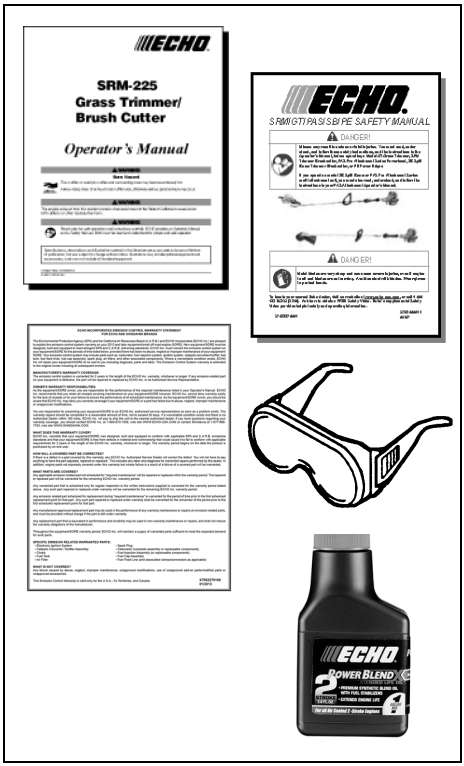

© 7/2017 ECHO Inc.

ASSEMBLY

Support Handle Installation

Note: Label shows minimum spacing for support handle location.

1. If necessary, position support handle for comfortable operation and securely tighten screws.

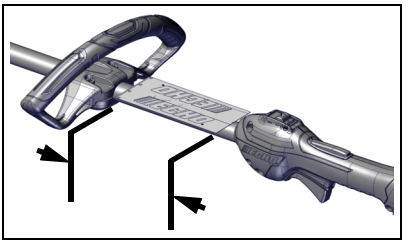

OPERATION

WARNING

Moving parts can amputate fingers or cause severe injuries. Keep hands, clothing and loose objects away from all openings. Always stop engine, disconnect spark plug, and make sure all moving parts have come to a complete stop before removing obstructions, clearing debris, or servicing unit.

WARNING

Engine exhaust IS HOT, and contains Carbon Monoxide (CO), a poison gas. Breathing CO can cause unconsciousness, serious injury, or death. Exhaust can cause serious burns. ALWAYS position unit so that exhaust is directed away from your face and body.

WARNING

Operation of this equipment may create sparks that can start fires around dry vegetation. This unit is equipped with a spark arrestor to prevent discharge of hot particles from the engine. Metal cutters can also create sparks if the cutter strikes rocks, metal, or other hard objects. Contact local fire authorities for laws or regulations regarding fire prevention requirements.

© 7/2017 ECHO Inc.

Operation With Blades

WARNING

Blade use DEMANDS specific Brush Cutter configuration. Operation without specified shield, barrier bar or U-handle, and harness can result in serious personal injury. Follow installation instructions.

PARTS REQUIRED FOR THESE BLADES:		
Pro Maxi-Cut Grass/ Weed Blade	**Rigid Plastic Tri-Cut Grass/Weed Blade**	**Metal Blade**
Support Handle, w/ or w/ o Barrier Bar	U-Handle or Support Handle w/Barrier Bar	U-Handle or Support Handle w/Barrier Bar
Shield w/cutoff knife	Shield w/cutoff knife	Shield w/o cutoff knife
Harness	Harness	Harness
Upper Plate & Flat Washer	Upper Plate & Glide Cup	Upper/Lower Blade Plates
Hex Nut	Hex Nut	Hex Nut
New Cotter Pin	New Cotter Pin	New Cotter Pin

WARNING

DO NOT INSTALL BLADES ON GT (CURVED SHAFT) MODEL TRIMMERS.

- Arbor Diameter of Upper Blade Plate must match arbor diameter of blades.
- A new cotter pin is required each time a blade is installed.
- Brush cutters over 7.5 kg (16.5 lbs.) dry weight (weight without fuel) require a double shoulder harness.

Note: The Barrier Bar is used to restrict rearward movement of the unit. The Barrier Bar is NOT A HANDLE and should not be gripped when using or carrying the unit.

© 7/2017 ECHO Inc.

Blade Selection

⚠ WARNING

The type of Blade used MUST be matched to the type and size of material cut. An improper or dull blade can cause serious personal injury. Blades MUST be sharp. Dull blades increase the chance of kick-out and injury to yourself and bystanders.

Plastic/Nylon Grass/Weed Blades may be used where ever the nylon line head is used. DO NOT use this blade for heavy weeds or brush.

8 Tooth Weed/Grass Blade is designed for grass, garden debris and thick weeds up to 19 mm (0.75 in.) diameter. DO NOT use this blade for brush or heavy woody growth.

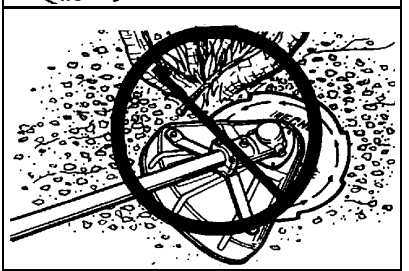

80 Tooth Brush Blade is designed for cutting brush and woody growth up to 13 mm (0.5 in.) diameter.

22 Tooth Clearing Blade is designed for dense thickets and saplings up to 64 mm (2.5 in.) diameter.

© 7/2017 ECHO Inc.

Use Shoulder/Waist Harness Use of the Shoulder/Waist Harness is recommended for **ALL** Trimmer/Brush Cutter use, not just Blade operation. The Shoulder/Waist Harness when used in a trimming operation with nylon line head suspends the trimmer from the operator's shoulder and reduces operator fatigue.

During blade operation, the same fatigue reduction is achieved. Safety to the operator is also enhanced by reducing the possibility of blade contact with the operator's hands and feet by restricting trimmer movement.

Fuel

WARNING

Diesel fuels and alternative fuels, such as E-15 (15% ethanol), E-85 (85% ethanol) or any fuels not meeting ECHO requirements are NOT approved for use in ECHO 2-stroke gasoline engines. Use of diesel or alternative fuels may cause performance problems, loss of power, overheating, fuel vapor lock, and unintended machine operation, including, but not limited to, improper clutch engagement. Diesel or alternative fuels may also cause premature deterioration of fuel lines, gaskets, carburetors and other engine components.

Fuel Requirements

Gasoline - Use 89 Octane [R+M/2] (mid grade or higher) gasoline known to be good quality. Gasoline may contain up to 10% Ethanol (grain alcohol) or 15% MTBE (methyl tertiary-butyl ether). Gasoline containing methanol (wood alcohol) is **NOT** approved. ECHO Red Armor Fuel™ (Power Fuel™) is 93 octane, ethanol-free fuel premixed with ECHO Red Armor® engine oil at 50:1 ratio. Use of ECHO Red Armor Fuel™ (Power Fuel™) is recommended to extend engine life in all air-cooled 2-stroke and 2/4-stroke hybrid engines.

© 7/2017 ECHO Inc.

Two Stroke Oil - A two-stroke engine oil meeting ISO-L-EGD (ISO/CD 13738) and J.A.S.O. FD Standards must be used. Echo brand 2-stroke oils meet these standards. Engine problems due to inadequate lubrication caused by failure to use an ISO-L-EGD (ISO/CD 13738) and J.A.S.O. M345-FD certified oil, such as Echo brand 2-stroke oils, will void the two-stroke engine warranty.

NOTICE

Echo brand 2-stroke oils may be mixed at 50:1 ratio for application in all Echo engines sold in the past regardless of ratio specified in those manuals.

Handling Fuel

DANGER

Fuel is VERY flammable. Use extreme care when mixing, storing or handling, or serious personal injury may result.

- ***Use an approved fuel container.***
- ***DO NOT smoke near fuel.***
- ***DO NOT allow flames or sparks near fuel.***
- ***Fuel tanks/cans may be under pressure. Always loosen fuel caps slowly allowing pressure to equalize.***
- ***NEVER refuel a unit when the engine is HOT or RUNNING!***
- ***DO NOT fill fuel tanks indoors. ALWAYS fill fuel tanks outdoors over bare ground.***
- ***DO NOT overfill fuel tank. Wipe up spills immediately.***
- ***Securely tighten fuel tank cap and close fuel container after refueling.***
- ***Inspect for fuel leakage. If fuel leakage is found, do not start or operate unit until leakage is repaired.***
- ***Move at least 3 m (10 ft.) from refueling location before starting the engine.***

© 7/2017 ECHO Inc.

Mixing Instructions

1. Fill an approved fuel container with half of the required amount of gasoline.
2. Add the proper amount of 2-stroke oil to gasoline.
3. Close container and shake to mix oil with gasoline.
4. Add remaining gasoline, close fuel container, and remix.

Fuel to Oil Mix – 50:1 Ratio			
US		Metric	
Gas	Oil	Gas	Oil
gal.	fl.oz.	L	cc
1	2.6	5	100
2	5.2	10	200
5	13	25	500

NOTICE

Spilled fuel is a leading cause of hydrocarbon emissions. Some states may require the use of automatic fuel shut-off containers to reduce fuel spillage.

- Empty the fuel tank prior to storing the unit. Return unused fuel to an approved fuel storage container.

Storage - Fuel storage laws vary by locality. Contact your local government for the laws affecting your area. As a precaution, store fuel in an approved, airtight container. Store in a well-ventilated, unoccupied building, away from sparks and flames.

NOTICE

Stored fuel ages. Do not mix more fuel than you expect to use in thirty (30) days, ninety (90) days when a fuel stabilizer is added.

NOTICE

Stored two-stroke fuel may separate. ALWAYS shake fuel container thoroughly before each use.

NOTICE

Used oil and gasoline, and soiled towels are hazardous waste materials. Disposal laws vary by locality.

© 7/2017 ECHO Inc.

Starting Cold Engine

WARNING

The attachment will operate immediately when the engine starts, and could result in possible serious injury. Keep movable parts of the attachment away from objects that could become entangled or thrown, and surfaces that could cause loss of control.

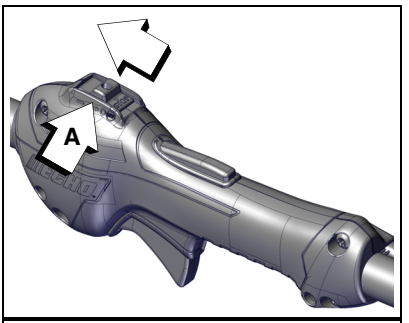

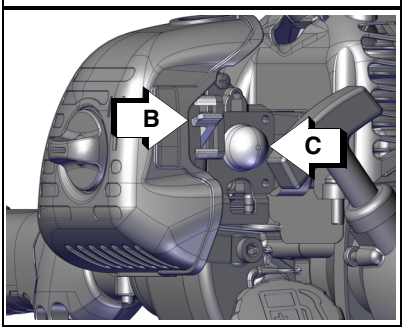

1. *Stop Switch*

   Move stop switch button (A) forward, away from the STOP position.

2. *Choke*

   Move choke lever (B) to COLD START (|⊸|) position.

3. *Purge Bulb*

   Pump purge bulb (C) until fuel is visible and flows freely in the clear fuel tank return line. Pump bulb an additional 4 or 5 times.

4. *Recoil Starter*

   Lay the unit on a flat area and keep movable attachment parts clear of all obstacles. Firmly grasp throttle handle and throttle trigger lockout with left hand and fully depress throttle trigger to wide open position. Rapidly pull recoil starter handle/rope (D) until engine fires (or maximum five [5] pulls).

© 7/2017 ECHO Inc.

5. *Choke*

   After engine fires (or 5 pulls), move choke (B) to the RUN (|↕|) (open) position. Firmly grasp throttle handle and throttle trigger lockout with left hand and fully depress throttle trigger to wide open position. Pull starter handle/rope until engine starts and runs. Release throttle trigger and allow unit to warm up at idle for several minutes.

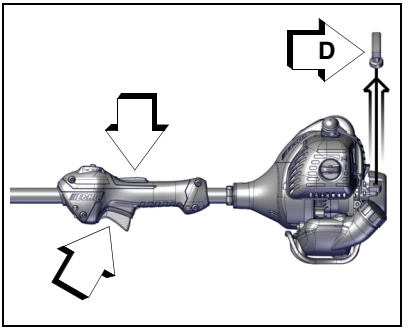

Note: If engine does not start with choke in “RUN” position after 5 pulls, repeat instructions 2 - 5.

6. *Throttle Trigger*

   After engine warm-up, grip throttle handle and support handle. Depress the throttle trigger lockout, and gradually depress throttle trigger to increase engine RPM to operating speed.

Starting Warm Engine

The starting procedure is the same as Cold Start except DO NOT close the choke, and do not hold throttle trigger fully depressed.

⚠ WARNING

The attachment should not move at idle, otherwise serious personal injury may result.

Note: If attachment moves, readjust carburetor according to “Carburetor Adjustment” instructions in this manual or see your ECHO Dealer.

1. *Stop Switch*

   Move stop switch button (A) forward away from the STOP position.

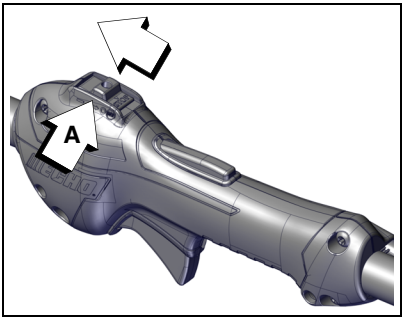

© 7/2017 ECHO Inc.

2. *Purge Bulb*

   Pump purge bulb (C) until fuel is visible in the “Clear” fuel return line. Pump bulb an additional 4 or 5 times.

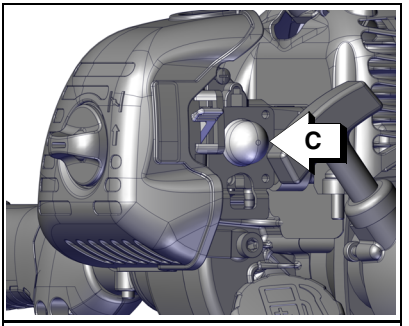

3. *Recoil Starter*

   Lay the unit on a flat area and keep movable attachment parts clear of all obstacles. Firmly grip throttle handle and throttle trigger lockout with left hand. Rapidly pull recoil starter handle/rope (D) until engine fires.

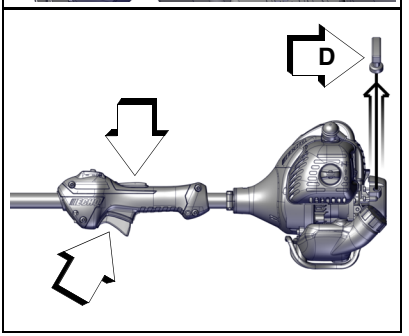

Note: If engine does not start after 5 pulls, use Cold Start Procedure.

1. Stopping Engine

1. *Throttle*

   Release throttle trigger and allow engine to return to idle before shutting off engine.

2. *Stop Switch*

   Move stop switch button (A) backward to STOP position.

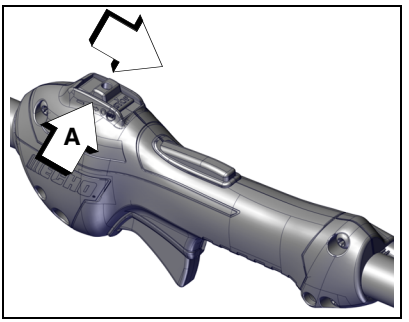

⚠ WARNING

If engine does not stop when stop switch is moved to STOP position, close choke - COLD START position - to stall engine. Have your ECHO dealer repair stop switch before using unit again.

© 7/2017 ECHO Inc.

MAINTENANCE

WARNING

Moving parts can amputate fingers or cause severe injuries. Keep hands, clothing and loose objects away from all openings. Always stop engine, disconnect spark plug, and make sure all moving parts have come to a complete stop before removing obstructions, clearing debris, or servicing unit. Allow unit to cool before performing service. Wear gloves to protect hands from sharp edges and hot surfaces.

Your ECHO unit is designed to provide many hours of trouble free service. Regular scheduled maintenance will help your unit achieve that goal. If you are unsure or are not equipped with the necessary tools, we recommend that you take your unit to an ECHO Servicing Dealer for maintenance. To help you decide whether you want to DO-IT-YOURSELF or have the ECHO Dealer do it, each maintenance task has been graded. If the task is not listed, see your ECHO Dealer for repairs.

Skill Levels

Level 1 = Easy to do. Common tools may be required.

Level 2 = Moderate difficulty. Some specialized tools may be required.

Level 3 = See your dealer.

Click HERE or go to http://www.echo-usa.com/products/maintenance-kit for information on Maintenance Kits.

Maintenance Intervals

COMPONENT/SYSTEM	MAINTENANCE PROCEDURE	SKILL LEVEL
Daily or Before Use		
Air Filter	Inspect/Clean*	1
Choke Shutter		
Fuel System	Inspect[3]	
Cooling System	Inspect/Clean	2
Recoil Starter Rope	Inspect/Clean*	1
Screws/Nuts/Bolts	Inspect/Tighten/Replace*	
Every Refuel		

© 7/2017 ECHO Inc.

COMPONENT/SYSTEM	MAINTENANCE PROCEDURE	SKILL LEVEL
Fuel System	Inspect[3]	1
3 Months		
Air Filter	Replace*	1
Fuel Filter	Inspect*	
Fuel Cap Gasket		
Spark Plug	Inspect/Clean/Replace*	
Muffler Spark Arrestor		2
Cylinder Exhaust Port	Inspect/Clean/De-carbon	
Drive Shaft (Flex Cable Models)	Grease[1]	
Gear Housing	Grease[2]	
Yearly		
Fuel Filter	Inspect/Replace*	1
Fuel Cap Gasket	Replace*	

IMPORTANT NOTE - Time intervals shown are maximum. Actual use and your experience will determine the frequency of required maintenance.

MAINTENANCE PROCEDURE NOTES:

[1]Apply lithium based grease every 25 hours of use.

[2]Apply lithium based grease every 50 hours of use.

[3]Low evaporative fuel tanks DO NOT require regular maintenance to maintain emission integrity.

*Replacement is recommended based on the finding of damage or wear during inspection.

© 7/2017 ECHO Inc.

Air Filter

Level 1.

Parts Required: Tune-Up Kit

1. Close choke (COLD START [|⊸|] position). This prevents dirt from entering the carburetor throat when the air filter is removed. Brush accumulated dirt from air cleaner area.
2. Remove air filter cover. Brush dirt from inside cover.
3. Replace filter if it is damaged, fuel soaked, very dirty, or the rubber sealing edges are deformed.
   - Lightly brush debris from filter.
   - Soak heavily soiled filters in water/detergent solution to loosen dirt, then brush lightly.
   - Rinse with clean water and allow to dry completely before reuse.
4. Install air filter in air filter case.
5. Install air filter cover.

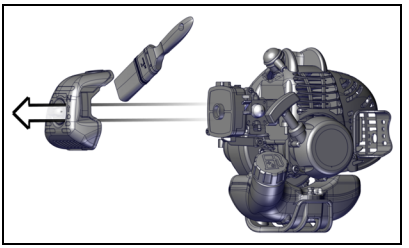

Fuel Filter

Level 1.

Parts Required: Tune-Up Kit

⚠ DANGER

Fuel is VERY flammable. Use extreme care when mixing, storing or handling, or serious personal injury may result.

1. Use a clean rag to remove loose dirt from around fuel cap and empty fuel tank.
2. Pull the fuel filter from the fuel tank.

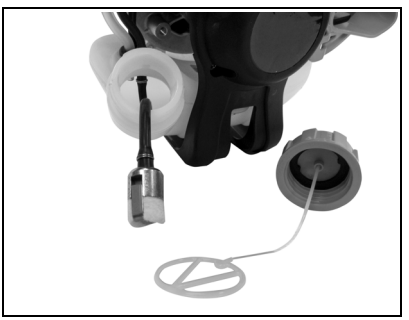

© 7/2017 ECHO Inc.

NOTICE

Do not damage fuel line while removing fuel filter from tank.

3. Remove the filter from the line and install the new filter.

Note: Federal EPA regulations require all model year 2012 and later gasoline powered engines produced for sale in the United States to be equipped with a special low permeation fuel supply hose between the carburetor and fuel tank. When servicing model year 2012 and later equipment, only fuel supply hoses certified by EPA can be used to replace the original equipment supply hose. Fines up to $37,500.00 may be enforced for using an non-certified replacement part.

Spark Plug

Level 2.

Parts Required: Tune-Up Kit

NOTICE

Use only NGK BPM8Y spark plug (BPMR8Y in Canada) otherwise severe engine damage may occur.

1. Remove spark plug and check for fouling, worn and rounded center electrode.
2. Clean the plug or replace with a new one. DO NOT sand blast to clean. Remaining sand will damage engine.
3. Adjust spark plug gap by bending outer electrode.

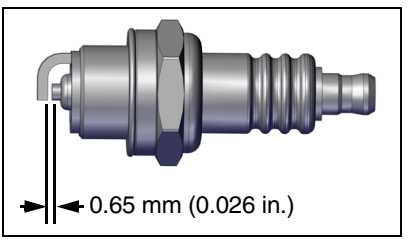

4. Tighten spark plug to 150-170 kgf•cm (130-150 in•lbf).

Cooling System

Level 2.

© 7/2017 ECHO Inc.

ENGLISH

NOTICE

To maintain proper engine operating temperatures, cooling air must pass freely through the cylinder fin area. This flow of air carries combustion heat away from the engine.

Overheating and engine seizure can occur when:

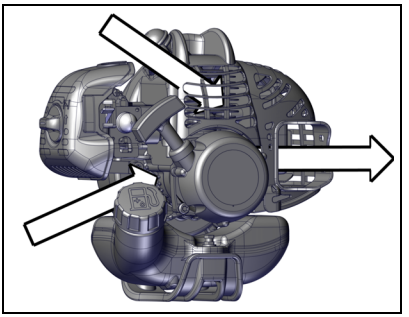

- Air intakes are blocked, preventing cooling air from reaching the cylinder.
- Dust and grass build up on the outside of the cylinder. This build up insulates the engine and prevents the heat from leaving.

Removal of cooling passage blockages or cleaning of cooling fins is considered “Normal Maintenance.” Any failure attributed to lack of maintenance is not warranted.

1. Remove spark plug lead.
2. Remove air cleaner cover (A).
3. Remove engine cover (B).

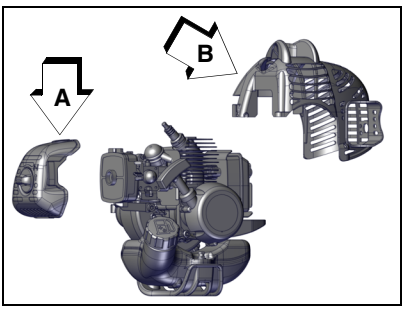

NOTICE

DO NOT use a metal scraper to remove dirt from the cylinder fins.

© 7/2017 ECHO Inc.

4. Use a brush to remove dirt from the cylinder fins.
5. Remove ignition wires from clip for cleaning.

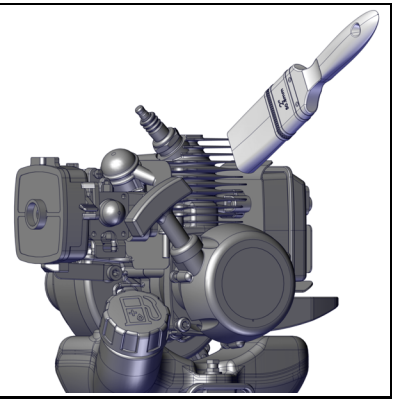

6. Remove grass and leaves from the grid between the recoil starter and fuel tank.
7. Assemble components in reverse order.

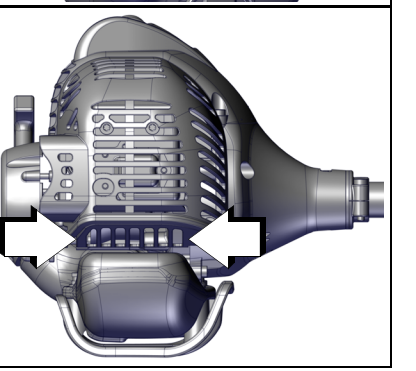

Exhaust System

Spark Arrestor Screen

Level 2.

Parts Required: Spark Arrestor Screen, Gasket

1. Remove spark plug lead and engine cover.
2. Place piston at Top Dead Center (TDC) to prevent carbon/dirt from entering cylinder.

© 7/2017 ECHO Inc.

3. Remove spark arrestor screen cover (C), gaskets (D), (E), and screen (F), from muffler body.
4. Clean carbon deposits from muffler components.

Note: When cleaning carbon deposit, be careful not to damage the catalytic element inside muffler.

5. Replace screen if it is cracked, plugged, or has holes burned through.
6. Assemble components in reverse order.

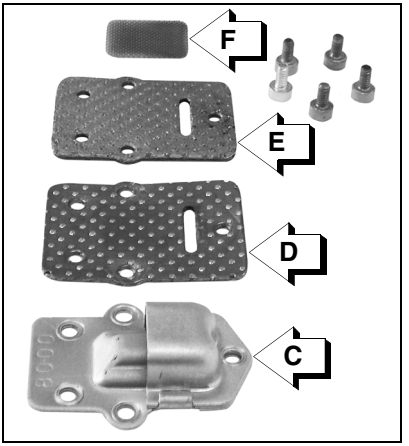

Exhaust Port Cleaning

Level 2.

Parts Required: As needed: Heat Shield

1. Remove spark plug lead from spark plug, and remove engine cover.
1. Place piston at top dead center. Remove muffler (A) and heat shield (B).

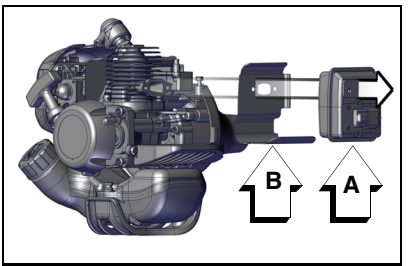

2. Use a wood or plastic scraping tool to clean deposits from cylinder exhaust port (C).

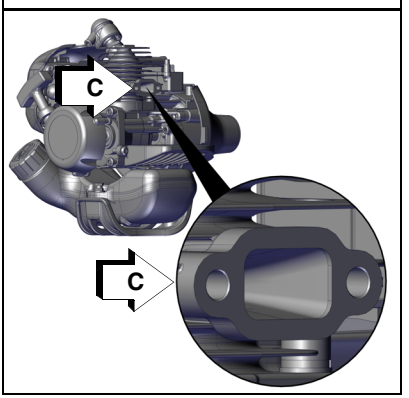

© 7/2017 ECHO Inc.

NOTICE

Never use a metal tool to scrape carbon from the exhaust port. Do not scratch the cylinder or piston when cleaning the exhaust port. Do not allow carbon particles to enter the cylinder.

3. Inspect heat shield, and replace if damaged.
4. Install heat shield and muffler.
5. Tighten muffler mounting bolts (or nuts) to 90-110 kgf•cm (80-95 in•lbf).
6. Install engine cover and attach spark plug lead.
7. Start engine, and warm to operating temperature.
8. Stop engine, and re-tighten mounting bolts (or nuts) to specifications.

Carburetor Adjustment

Level 2.

Engine Break-In

New engines must be operated a minimum duration of two tanks of fuel break-in before carburetor adjustments can be made. During the break-in period your engine performance will increase and exhaust emissions will stabilize. Idle speed can be adjusted as required.

High Altitude Operation

This engine has been factory adjusted to maintain satisfactory starting, emission, and durability performance up to 1,100 ft. above sea level (ASL) (96.0 kPa). To maintain proper engine operation and emission compliance above 1,100 ft. ASL the carburetor may need to be adjusted by an authorized ECHO service dealer.

NOTICE

If the engine is adjusted for operation above 1,100 ft. ASL, the carburetor must be re-adjusted when operating the engine below 1,100 ft. ASL, otherwise severe engine damage may result.

Note: Every unit is run at the factory and the carburetor is set in compliance with emission regulations. Carburetor adjustments, other than idle speed, must be performed by an authorized ECHO dealer.

© 7/2017 ECHO Inc.

Check idle speed and reset if necessary. If a tachometer is available, idle speed screw (A) should be set to the specifications found on “Specifications” page of this manual. Turn idle screw (A) clockwise to increase idle speed; counterclockwise to decrease idle speed.

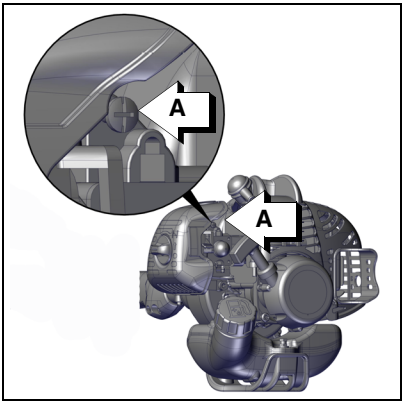

WARNING

When carburetor adjustment is completed, the cutting attachment should not move at idle, otherwise serious personal injury may result.

Lubrication

Level 1.

Parts Required: Lithium Based Grease.

Gear Housing

1. Clean all loose debris from gear case.
2. Remove plug (A) and check level of grease.
3. Add grease if necessary. DO NOT over-fill.

© 7/2017 ECHO Inc.

Drive Shaft (flex cable models)

1. Loosen screw (B) and remove center locating screw (C). Pull gear case and shield from drive shaft housing.

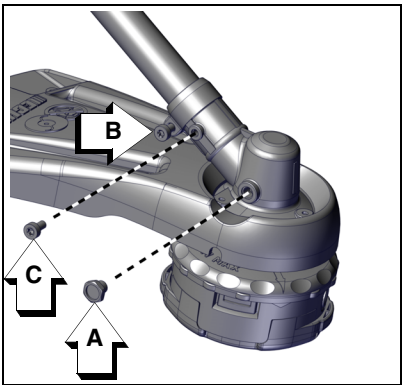

2. Pull flexible cable from the drive shaft housing, wipe clean and re-coat with a 15 ml (0.5 oz.) of grease.
3. Slide the flexible cable back in the drive housing. DO NOT get dirt on the flex cable.
4. Install the gear housing and shield assembly.

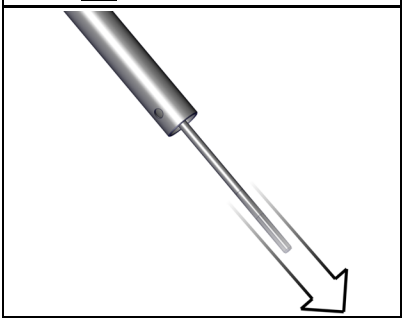

Nylon Line Head Disassembly Instructions

Note: For normal use, Speed Feed® head disassembly is not necessary. However, if circumstances require disassembly, follow these instructions.

© 7/2017 ECHO Inc.

1. Press top of locking tabs (A) on both sides of Speed Feed® head to release cover (B) from eyelet carrier (C).
2. Remove cover from eyelet carrier.

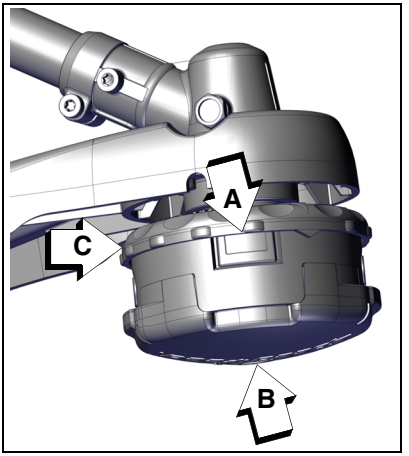

Nylon Line Replacement

CAUTION

Wear gloves or personal injury may result:

- ***Cutoff knife is sharp.***
- ***Gearcase and surrounding area may be hot.***

1. Cut one piece of line to recommended length.
   2.0 mm (0.080 in.) diameter
   6 m (20 ft.).
   2.4 mm (0.095 in.) diameter
   6 m (20 ft.).
2. Align arrows on top of knob with openings in eyelets.

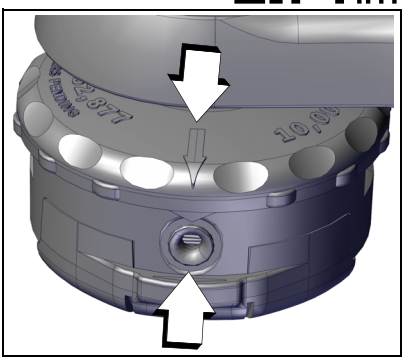

© 7/2017 ECHO Inc.

3. Insert one end of trimmer line into an eyelet, and push line equal distance through trimmer head.

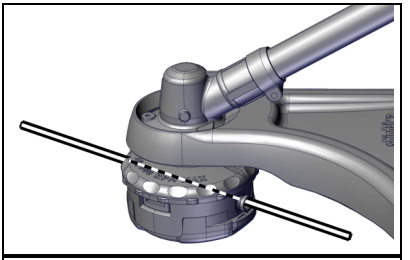

4. Hold trimmer head while turning knob clockwise to wind line onto spool until about 13 cm (5 in.) of each line remains exposed.

Trimmer head is now fully loaded and ready for operation.

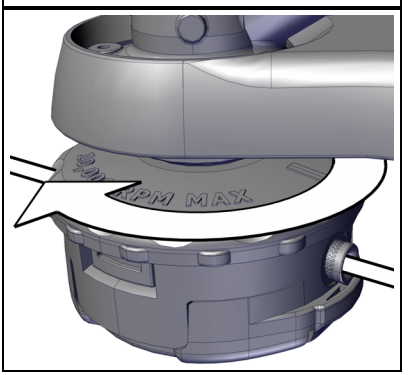

NOTICE

When the wear indicators located at the bottom of the Speed-Feed® head are worn smooth, or if holes appear, replacement of the cover or the entire Speed-Feed® head is required.

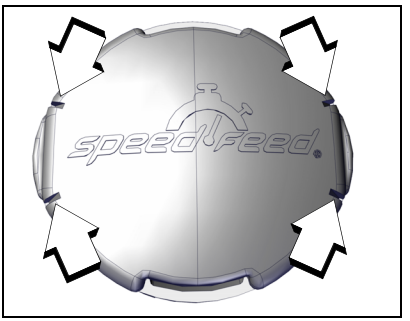

© 7/2017 ECHO Inc.

Sharpening Metal Blades

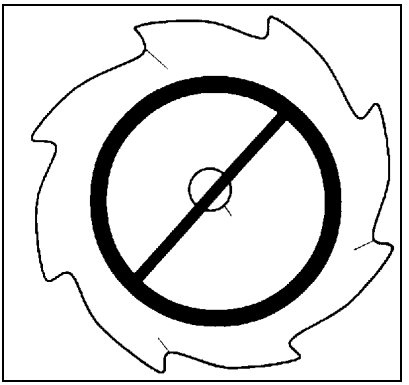

Several styles of metal blades are approved for use on the Brush Cutter. The 8-tooth blade can be sharpened during normal maintenance. The clearing blade and 80 tooth blade require professional service.

Before sharpening, CLOSELY inspect blade for cracks (look at the bottom of each tooth and the center mounting hole closely), missing teeth and bending. If ANY of these problems are discovered, replace the blade.

When sharpening a blade, always remove the same amount of materials from each tooth to maintain balance. A blade that is not balanced will cause unsafe handling due to vibration and can result in blade failure.

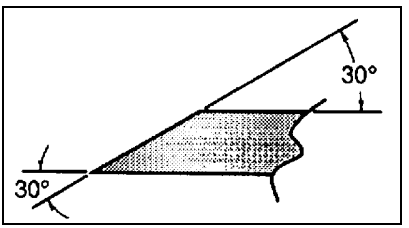

1. File each tooth at a 30 degree angle a specific number of times, e.g., 4 strokes per tooth. Work your way around the blade until all teeth are sharp.
2. DO NOT file the ‘gullet’ (radius) of the tooth with the flat file. The radius must remain. A sharp corner will lead to a crack and blade failure.

NOTICE

If an electric grinder is used, use care not to overheat teeth, do not allow tips/tooth to glow red or turn blue. DO NOT place blade in cooling water. This will change the temper of the blade and could result in blade failure.

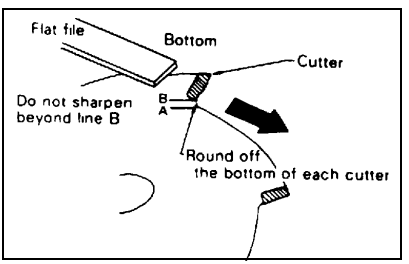

3. After sharpening teeth, check each tooth radius for evidence of a square (sharp) corner. Use the round (rat tail) file to renew the radius.

© 7/2017 ECHO Inc.

TROUBLESHOOTING

DANGER

Fuel vapors are extremely flammable and may cause fire and/or explosion. Never test for ignition spark by grounding spark plug near cylinder plug hole, otherwise serious personal injury may result.

ENGINE PROBLEM TROUBLESHOOTING CHART				
Problem	**Check**	**Status**	**Cause**	**Remedy**
Engine starts hard or Engine does not start	Fuel at carburetor	No fuel at carburetor	Fuel strainer or fuel line obstructed	Clean or replace See your Echo dealer
Engine starts hard or Engine does not start	Fuel at cylinder	No fuel at cylinder	Carburetor	See your Echo dealer
		Muffler wet with fuel	Fuel mixture too rich	OPEN choke Clean or replace air filter Adjust carburetor See your Echo dealer
	Spark at end of plug wire	No spark	Stop switch OFF - Electrical problem - Interlock switch	Turn switch to ON See your Echo dealer
	Spark at plug		Incorrect gap - Covered with carbon - Fouled with fuel - Plug defective	Adjust to 0.65mm (0.026 in.) Clean or replace plug

© 7/2017 ECHO Inc.

ENGINE PROBLEM TROUBLESHOOTING CHART				
Problem	**Check**	**Status**	**Cause**	**Remedy**
Engine runs, but dies or Engine does not accelerate properly	Air filter	Air filter dirty	Normal wear	Clean or replace
	Fuel filter	Fuel filter dirty	Contaminants or residue in fuel	Replace filter or replace fuel
	Fuel vent	Fuel vent plugged	Contaminated fuel	Clean or replace
	Spark plug	Plug dirty or worn	Normal wear	Clean and adjust or replace
	Carburetor	Improper adjustment	Vibration	Adjust
	Cooling system	Cooling system dirty or plugged	Extended operation in dirty or dusty locations	Clean
	Spark arrestor screen	Spark arrestor screen plugged	Normal wear	Replace
Engine does not crank	N/A		Internal engine problem	See your Echo dealer

STORAGE

WARNING

During operation the muffler or catalytic muffler and surrounding cover become hot. Always keep exhaust area clear of flammable debris during transportation or when storing, otherwise serious property damage or personal injury may result.

Long Term Storage (Over 30 Days)

Do not store your unit for a prolonged period of time (30 days or longer) without performing protective storage maintenance which includes the following:

1. Store unit in a dry, dust free place, out of the reach of children.

DANGER

Do not store in enclosure where fuel fumes may accumulate or reach an open flame or spark.

© 7/2017 ECHO Inc.

2. Place the stop switch in the “OFF” position.
3. Remove accumulation of grease, oil, dirt and debris from exterior of unit.
4. Perform all periodic lubrication and services that are required.
5. Tighten all the screws and nuts.
6. Drain fuel tank completely. Press purge bulb 6-7 times to remove remaining fuel from carburetor then drain the tank again. Close choke, start and run the engine until it stops due to lack of fuel.
7. Allow engine to cool. Remove the spark plug lead from the spark plug. Remove the spark plug. Pour 7 cc (0.25 oz.) of fresh, clean, two-stroke engine oil into the cylinder through the spark plug hole.
8. Pull the recoil starter handle 2-3 times to distribute the oil inside the engine.
9. Observe the piston location through the spark plug hole. Pull the recoil handle slowly until the piston reaches the top of its travel and leave it there.
10. Install the spark plug. Connect the spark plug lead to the spark plug.

© 7/2017 ECHO Inc.

SPECIFICATIONS

MODEL	SRM-225
Length w/o cutter head	1793 mm (70.6 in.)
Width	251 mm (9.88 in.)
Height	328 mm (12.9 in.)
Weight (dry) w/o cutter head	5.1 kg (11.24lb.)
Engine Type	Air cooled, two-stroke, single cylinder gasoline engine
Bore	32.2 mm (1.27 in.)
Stroke	26.0 mm (1.02 in.)
Displacement	21.2 cc (1.29 cu. in.)
Exhaust	Spark arrestor muffler or spark arrestor muffler with catalyst
Carburetor	Diaphragm w/purge pump
Ignition System	Flywheel magneto, capacitor discharge ignition type
Spark Plug	NGK BPMR8Y Gap 0.65 mm (0.026 in.)
Fuel	Mixed (Gasoline and Two-stroke Oil)
Fuel/Oil Ratio	50 : 1 Power Blend X™ or ECHO Red Armor® ISO-L-EGD (ISO/CD 13738) and J.A.S.O. M345- FD, two-stroke, air-cooled engine oil.
Gasoline	Use 89 Octane unleaded. Do not use fuel containing methyl alcohol, more than 10% ethyl alcohol or 15% MTBE. Do not use alternative fuels such as E15 or E85.
Oil	Power Blend X™ or ECHO Red Armor® Premium Universal 2-Stroke Oil
Fuel Tank Capacity	0.44 L (14.9 US fl. oz.)
Starter System	Automatic Rewind Starter
Clutch	Centrifugal Type
Vibration Isolated System	Rubber cushion on engine mount (heavy duty). Rubber grip on front handle.
Operating Rod	25.0 mm aluminum Tube
Drive Shaft	6.35 mm (1/4 in.) flexible shaft
Gear Case Ratio	1.4:1 Reduction
Rotating Direction	Counterclockwise; viewed from top
Cutter Head	Speed Feed® 400 LH Nylon line head, Line capacity 6.0 m (20 ft.)

© 7/2017 ECHO Inc.

MODEL	SRM-225
Handle	Front - loop, Rear handle
Shoulder Harness	Optional
Idle Speed	3,000 RPM
Clutch Engagement Speed	3,850 RPM
Wide Open Throttle Speed (W.O.T.)	8,700 RPM

PRODUCT REGISTRATION

Thank you for choosing ECHO Power Equipment

Please go to http://www.echo-usa.com/Warranty/Register-Your-ECHO to register your new product on-line. It's ***FAST*** and ***EASY***! NOTE: your information will never be sold or misused by ECHO, Inc. Registering your purchase enables us to contact you in the unlikely event of a service update or product recall, and verifies your ownership for warranty consideration.

If you do not have access to the Internet, you can complete the form below and mail to:

ECHO Inc., Product Registration, PO Box 1139, Lake Zurich IL 60047.

© 7/2017 ECHO Inc.

PRODUCT REGISTRATION CARD : TARJETA DE REGISTRO : CARTE D'ENREGISTREMENT DU PRODUIT

ONLINE OPTION: Register online and save a stamp! You will be alerted of product updates and/or be sent new ECHO product information and special offers. Simply go to: **www.echo-usa.com**

OPCIÓN POR INTERNET: ¡Registrese en la pagina web y ahorre una estampilla! Le alertarán sobre actualizaciones del producto y/o se le enviara información sobre los nuevos productos ECHO y las ofertas especiales. Simplemente visite: **www.echo-usa.com**

OPTION EN LIGNE : Enregistrer en ligne et épargner un timbre! Vous serez informé sur les nouveaux produits ECHO et les mises à jour de produit ainsi que les offres spéciales. Simplement visitez le: **www.echo-usa.com**

Please Print : Por Favor Enscriba Con Letra De Molde : En Lettre Carré S.V.P.

Confidential: Information provided will not be shared or sold

Purchaser's Name : Nombre del Comprador : Nom de l'acheteur

Address : Dirección : Adresse

City : Ciudad : Ville | *State : Estado : Province* | *Zip Code : Código Postal : Code Postal*

E-Mail Address : Dirección De Correo Electrónico : Courrier Électronique

Phone Number : Número De Teléfono : Téléphone | *Date of Purchase : Fecha de la Compra : Date de l'achat*

Where Purchased : Nombre del Almacén donde fue Comprado : Lieu d'achat

Model Number : Numero del Modelo : No. de modéle | *Serial Number : Numero de Serie : No. de série*

Registering your purchase enables us to contact you in the unlikely event of a service update or product recall and verifies your ownership in the event of loss. : El registrar su compra nos permite estar en contacto con usted en caso de cualquier evento como el aviso de tiempo de servicio o la revocación del producto y verificación de propiedad en caso de robo o pérdida. : L'enregistrement de votre achat nous permettra de vous contacter dans le cas improbable de modifications des instructions d'entretien ou de rappel du produit et vérifier que vous êtes le propriétaire en cas de vol ou de perte.

Primary use of tool: ☐ Professional ☐ Homeowner ☐ Rental Equip.
Uso primario de la herramienta: ☐ Profesional ☐ Dueño de casa ☐ Alquiler
Usage principal : ☐ Professionnel ☐ Residential ☐ Location

Do you wish to receive periodic ECHO product information and special offers by e-mail? ☐ Yes ☐ No
¿Desea usted recibir información periódica y ofertas especiales por correo electronico sobre el producto ECHO? ☐ Yes ☐ No
Souhaitez-vous recevoir périodiquement de l'information sur les produits ECHO et les offres spéciales par courrier électronique ? ☐ Oui ☐ Non

Did you visit the ECHO website before purchasing your product?
☐ Yes ☐ No
Visitó usted la pagina web ECHO antes de comprar su producto?
☐ Si ☐ No
Avez-vous visité le site d'ECHO avant de procurer votre produit?
☐ Oui ☐ Non

What factor(s) most influenced your purchase?
☐ Performance ☐ Price ☐ Dealer
☐ Reliability ☐ Prior Experience ☐ Quality
☐ Friend/Family ☐ Brand ☐ Warranty

¿Qué factor(es) influenció más en su compra?
☐ Funcionamiento ☐ Precio ☐ Distribuidor
☐ Confiabilidad ☐ Experiencia Anterior ☐ Calidad
☐ Amigo/Familia ☐ Marca ☐ Garantía

Quel facteur (facteurs) vous a influencé le plus?
☐ Performance ☐ Prix ☐ Marchand
☐ Fiabilité ☐ Expérience ☐ Qualité
☐ Ami/Famille ☐ Marque ☐ Garantie

ECHO INC., 400 Oakwood Rd., Lake Zurich, IL 60047
1.800.432.ECHO WWW.ECHO-USA.COM

X7572270206 02-2012

ENGLISH

© 7/2017 ECHO Inc.

NOTES

© 7/2017 ECHO Inc.

© 7/2017 ECHO Inc.

U06012001001 - U06012999999

ECHO, INCORPORATED
400 Oakwood Road
Lake Zurich, IL 60047
www.echo-usa.com