Operator's Manual HC-2020 Hedge Trimmer

⚠ WARNING

The engine exhaust from this product contains chemicals known to the State of California to cause cancer, birth defects or other reproductive harm.

⚠ WARNING

Read and understand all provided literature before use. Failure to do so could result in serious injury.

X7702248600

© 1/20 ECHO Incorporated

TABLE OF CONTENTS

ÍTable of Contents 2
Introduction 3
Servicing Information 3
Parts/Serial Number 3
Additional or Replacement Manuals 3
Warranty Registration 3
Service 4
Safety 5
Manual Safety Symbols and Important Information 5
International Symbols 6
Personal Condition and Safety Equipment 7
Equipment 12
Description 13
Contents 14
Assembly 14
Operation 15
Fuel 15
Starting Cold Engine 18
Starting Warm Engine 19
Stopping Engine 21
Hedge Trimming 21
Maintenance 23
Skill Levels 23
Maintenance Intervals 24
Air Filter 25
Fuel Filter 25
Spark Plug 26
Cooling System 27
Exhaust System 28
Carburetor Adjustment 30
Lubrication 31
Blades 32
Troubleshooting 34
Storage 36
Long Term Storage (Over 30 Days) 36
Specifications 38

© 1/20 ECHO Incorporated

INTRODUCTION

Specifications, descriptions and illustrative material in this literature are as accurate as known at the time of publication, but are subject to change without notice. Illustrations may include optional equipment and accessories, and may not include all standard equipment.

Read and understand all provided literature. Literature contains specifications and information for safety, operation, maintenance, storage and assembly specific to this product. .

SERVICING INFORMATION

Parts/Serial Number

Genuine ECHO Parts and Assemblies for your products are available only from an Authorized ECHO Dealer. When you do need to buy parts **always** have the Model Number and Serial Number of the unit with you. You can find these numbers on the engine housing. For future reference, write them in the space provided below.

Model No. _____
SN. _____

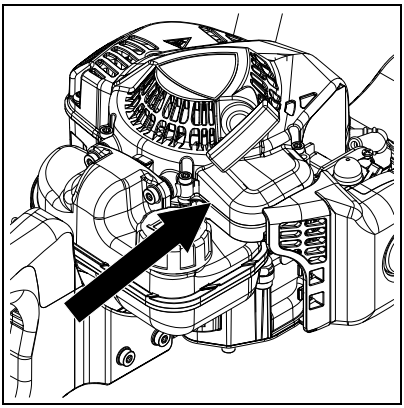

Additional or Replacement Manuals

Replacement Operator, Safety Manuals, and Parts Catalogs are available from your ECHO dealer or at echo-latinamerica.com .

Warranty Registration

To ensure trouble free warranty coverage it is important that you register your ECHO equipment on-line at echo-latinamerica.com or by filling out the warranty registration card supplied with your unit. Registering your product confirms your warranty coverage and provides a direct link between you and ECHO if we find it necessary to contact you.

© 1/20 ECHO Incorporated

Service

Service of this product during the warranty period must be performed by an Authorized ECHO Service Dealer. For the name and address of the Authorized ECHO Service Dealer nearest you, visit echo-latinamerica.com.

© 1/20 ECHO Incorporated

SAFETY

Manual Safety Symbols and Important Information

Throughout this manual and on the product itself, you will find safety alerts and helpful, informational messages preceded by symbols or key words. The following is an explanation of those symbols and key words and what they mean to you.

DANGER

The safety alert symbol accompanied by the word "DANGER" calls attention to an act or condition which WILL lead to serious personal injury or death if not avoided.

WARNING

The safety alert symbol accompanied by the word "WARNING" calls attention to an act or condition which CAN lead to serious personal injury or death if not avoided.

CAUTION

The safety alert symbol accompanied by the word "CAUTION" calls attention to an act or condition which may lead to minor or moderate personal injury if not avoided.

NOTICE

The enclosed message provides information necessary for the protection of the unit.

Note: This enclosed message provides tips for use, care and maintenance of the unit.

CIRCLE AND SLASH SYMBOL
This symbol means the specific action shown is prohibited. Ignoring these prohibitions can result in serious or fatal injury.

© 1/20 ECHO Incorporated

International Symbols

Symbol	Description	Symbol	Description
	Read and understand Owners Manual		Fuel and oil mixture
	Wear eye, ear and head protection		Finger severing
STOP	Emergency Stop		Hot Surface
	Wear hand and foot protection. Use two handed		DO NOT smoke near fuel
	Choke Control “COLD START” Position (Choke Closed)	Ignition ON I OFF O	Ignition ON / OFF
	Choke Control “RUN” Position (Choke Open)		Do not operate without guards in place.
L	Carburetor Adjustment - Low speed mixture	H	Carburetor Adjustment - High speed mixture
	Safety/Alert	T	Carburetor Adjustment - Idle speed
	Avoid all power lines. This unit is not insulated against electrical current.		Do not operate closer than 15 M (50 ft.) from electrical hazard.

© 1/20 ECHO Incorporated

Symbol	Description	Symbol	Description
	Plan retreat path from falling objects		Purge Bulb
	DO NOT allow flames or sparks near fuel		Wear slip resistant footwear
		Keep bystanders at least 4.5 meters (15 ft.) away.	

Personal Condition and Safety Equipment

WARNING

Cancer and Reproductive Harm
www.P65Warnings.ca.gov

WARNING

The muffler or catalytic muffler and surrounding cover may become extremely hot. Always keep clear of exhaust and muffler area, otherwise serious personal injury may occur.

© 1/20 ECHO Incorporated

WARNING

Users of this product risk injury to themselves and others if the unit is used improperly and/or safety precautions are not followed. Proper clothing and safety gear must be worn when operating unit.

Physical Condition

Your judgment and physical dexterity may not be good:

- If you are tired or sick
- If you are taking medication
- If you have taken alcohol or drugs

Operate unit only if you are physically and mentally well.

Eye Protection

WARNING

- **Eye protection that meets ANSI Z87.1 or CE requirements must be worn whenever you operate the unit.**
- **For additional safety, a full-face shield may be worn over safety glasses or goggles to provide protection from sharp branches or flying debris.**

Hand Protection

Wear sturdy, no-slip, rubber work gloves to improve your grip on the handles. Gloves also provide protection against cuts and scratches, cold environments, and reduce the transmission of machine vibration to your hands.

Hearing/Ear Protection

ECHO recommends wearing personal protection whenever unit is used.

Breathing Protection

Operators who are sensitive to dust or other common airborne allergens may need to wear a dust mask to prevent inhaling these materials while operating unit. Dust masks can provide protection against dust, plant debris, and other plant matter such as pollen. Make sure the mask does not impair your vision, and replace the mask as needed to prevent air restrictions.

© 1/20 ECHO Incorporated

Proper Clothing

Wear snug-fitting, durable clothing:

- Pants should have long legs, shirts should have long sleeves.
- DO NOT WEAR SHORTS.
- DO NOT WEAR TIES, SCARVES, JEWELRY, or clothing with loose or hanging items that could become entangled in moving parts or surrounding growth.
- Keep clothing buttoned or zipped, and keep shirt tails tucked in.
- Wear sturdy work shoes with nonskid rubber soles:
- DO NOT WEAR OPEN TOED SHOES.
- DO NOT OPERATE UNIT WITH BARE FEET.

Keep long hair away from engine and air intake. Retain hair with cap or net.

Heavy protective clothing can increase operator fatigue, which may lead to heat stroke. Schedule heavy work for early morning or late afternoon hours when temperatures are cooler.

WARNING

The components of this machine generate an electromagnetic field during operation, which may interfere with some pacemakers. To reduce the risk of serious or fatal injury, persons with pacemakers should consult with their physician and the pacemaker manufacturer before operating this machine. In the absence of such information, ECHO does not recommend the use of this machine by anyone who has a pacemaker.

Extended Operation / Extreme Conditions

CAUTION

Prolonged exposure to cold and/or vibration may result in injury. Read and follow all safety and operation instructions to minimize risk of injury. Failure to follow instructions may result in painful wrist/hand/arm injuries.

© 1/20 ECHO Incorporated

It is believed that a condition called Raynaud's Phenomenon, which affects the fingers of certain individuals, may be brought about by exposure to vibration and cold. Exposure to vibration and cold may cause tingling and burning sensations, followed by loss of color and numbness in the fingers. The following precautions are strongly recommended, because the minimum exposure, which might trigger the ailment, is unknown.

- Keep your body warm, especially the head, neck, feet, ankles, hands, and wrists.
- Maintain good blood circulation by performing vigorous arm exercises during frequent work breaks, and also by not smoking.
- Limit the hours of operation. Try to fill each day with jobs where operating the unit or other hand-held power equipment is not required.
- If you experience discomfort, redness, and swelling of the fingers followed by whitening and loss of feeling, consult your physician before further exposing yourself to cold and vibration.

Repetitive Stress Injuries (RSI)

It is believed that overusing the muscles and tendons of the fingers, hands, arms, and shoulders may cause soreness, swelling, numbness, weakness, and extreme pain in those areas. Certain repetitive hand activities may put you at a high risk for developing a Repetitive Stress Injury (RSI). An extreme RSI condition is Carpal Tunnel Syndrome (CTS), which could occur when your wrist swells and squeezes a vital nerve that runs through the area. Some believe that prolonged exposure to vibration may contribute to CTS. CTS can cause severe pain for months or even years.

To reduce the risk of RSI/CTS, do the following:

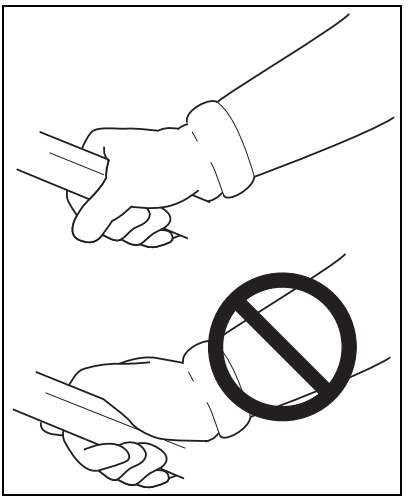

- Avoid using your wrist in a bent, extended, or twisted position. Instead try to maintain a straight wrist position. Also, when grasping, use your whole hand, not just the thumb and index finger.
- Take periodic breaks to minimize repetition and rest your hands.
- Reduce the speed and force with which you do the repetitive movement.
- Do exercises to strengthen the hand and arm muscles.

© 1/20 ECHO Incorporated

- Immediately stop using all power equipment and consult a doctor if you feel tingling, numbness, or pain in the fingers, hands, wrists, or arms. The sooner RSI/CTS is diagnosed, the more likely permanent nerve and muscle damage can be prevented.

⚠ DANGER

All over head electrical conductors and communications wires can have electricity flow with high voltages. This unit is not insulated against electrical current. Never touch wires directly or indirectly, otherwise serious injury or death may result.

⚠ DANGER

Do not operate this product indoors or in inadequately ventilated areas. Engine exhaust contains poisonous emissions and can cause serious injury or death.

Read the Manuals

- Provide all users of this equipment with the Operator's Manual for instructions on Safe Operation.

Clear the Work Area

- Spectators and fellow workers must be warned, and children and animals prevented from coming nearer than 15 m (50 ft.) while the unit is in use.

Keep a Firm Grip

- Always hold throttle handle and support handle with thumbs and fingers tightly encircling the handles.

Keep a Solid Stance

- Maintain footing and balance at all times. Do not stand on slippery, uneven or unstable surfaces. Do not work in odd positions or on ladders. Do not over reach.

Avoid Hot Surfaces

- Keep exhaust area clear of flammable debris. Avoid contact during and immediately after operation.

© 1/20 ECHO Incorporated

WARNING

Never perform blade maintenance procedures while engine is running.

Equipment

WARNING

Use only ECHO attachments. Serious injury may result from the use of a non-approved attachment combination. ECHO, INC. will not be responsible for the failure of cutting devices, attachments or accessories which have not been tested and approved by ECHO, INC. Read and comply with all safety instructions listed in this manual and safety manual.

- **Check unit for loose or missing nuts, bolts, and screws. Tighten and/or replace as needed.**
- **Check that the cutting attachment is firmly attached and in safe operating condition. Dull, loose or damaged blades should not be used.**

WARNING

Moving parts can amputate fingers or cause severe injuries. Keep hands, clothing and loose objects away from all openings.

- ***ALWAYS stop engine, disconnect spark plug, and make sure all moving parts have come to a complete stop before removing obstructions, clearing debris, or servicing unit.***
- ***DO NOT start or operate unit unless all guards and protective covers are properly assembled to unit.***
- ***NEVER reach into any opening while the engine is running. Moving parts may not be visible through openings.***

WARNING

Periodically check fuel system (fuel lines, vent, grommet, fuel tank, and fuel cap) for leaks especially if the unit is dropped. If damage or leaks are found, do not use unit, otherwise serious personal injury or property damage may occur. Have unit repaired by an authorized servicing dealer before using.

© 1/20 ECHO Incorporated

DESCRIPTION

Locate the safety decal(s) on your unit. Make sure the decal(s) is legible and that you understand and follow the instructions on it. If a decal cannot be read, a new one can be ordered from your ECHO dealer. The safety decal is for example only. Your label may appear slightly different.

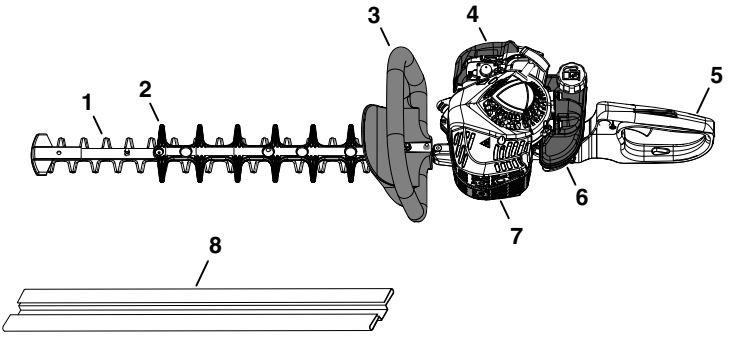

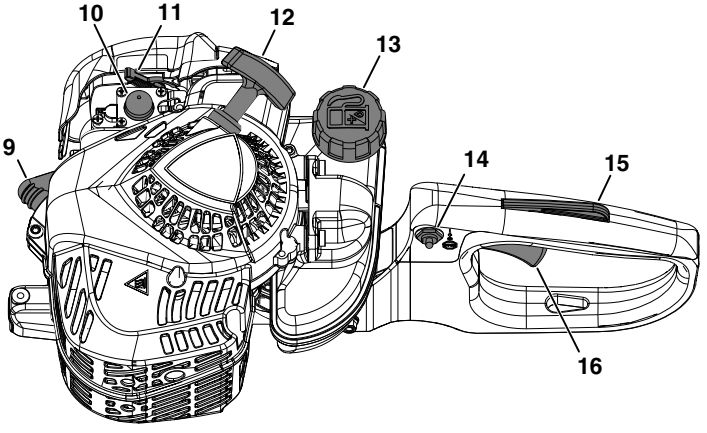

© 1/20 ECHO Incorporated

1. Blades
2. Blade Guard
3. Support Handle - For Right Hand
4. Air Cleaner
5. Throttle Handle - For Left Hand
6. Fuel Tank
7. Spark Arrestor Muffler Or Spark Arrestor Muffler With Catalyst
8. Blade Cover
9. Spark Plug
10. Purge Bulb
11. Choke
12. Recoil Starter Handle
13. Fuel Tank Cap
14. Stop Switch
15. Throttle Trigger Lockout
16. Throttle Trigger

CONTENTS

The ECHO product you purchased has been factory pre-assembled for your convenience. Due to packaging restrictions, some assembly may be necessary.

After opening the carton, check for damage. Immediately notify your retailer or ECHO Dealer of damaged or missing parts. Use the contents list to check for missing parts.

1	Hedge Trimmer Assembly
1	Operator’s Manual
1	Warranty Statement
1	Blade Cover

ASSEMBLY

This model is factory assembled.

© 1/20 ECHO Incorporated

OPERATION

WARNING

Moving parts can amputate fingers or cause severe injuries. Keep hands, clothing and loose objects away from all openings. Always stop engine, disconnect spark plug, and make sure all moving parts have come to a complete stop before removing obstructions, clearing debris, or servicing unit.

WARNING

Engine exhaust IS HOT, and contains Carbon Monoxide (CO), a poison gas. Breathing CO can cause unconsciousness, serious injury, or death. Exhaust can cause serious burns. ALWAYS position unit so that exhaust is directed away from your face and body.

WARNING

Operation of this equipment may create sparks that can start fires around dry vegetation. This unit is equipped with a spark arrestor to prevent discharge of hot particles from the engine. Metal cutters can also create sparks if the cutter strikes rocks, metal, or other hard objects. Contact local fire authorities for laws or regulations regarding fire prevention requirements.

Fuel

NOTICE

Use of unmixed, improperly mixed, or fuel older than 90 days, (stale fuel), may cause hard starting, poor performance, or severe engine damage and void the product warranty. Read and follow instructions in the Storage section of this manual.

© 1/20 ECHO Incorporated

⚠ WARNING

Fuel containing more than 25% ethanol is NOT approved for use in ECHO 2-stroke gasoline engines. Fuel containing more than 25% ethanol may cause performance problems, loss of power, overheating, fuel vapor lock, and unintended machine operation, including, but not limited to, improper clutch engagement. Fuel containing more than 25% ethanol may also cause premature deterioration of fuel lines, gaskets, carburetors and other engine components.

Fuel Requirements

Gasoline - Use 89 Octane (mid grade or higher) gasoline known to be good quality. Gasoline may contain up to 25% Ethanol. Gasoline containing methanol (wood alcohol) is NOT approved.

Two Stroke Oil - A two-stroke engine oil meeting ISO-L-EGD (ISO/CD 13738) and J.A.S.O. FD Standards must be used. Echo brand 2-Stroke Oil meets these standards. Engine problems due to inadequate lubrication caused by failure to use an ISO-L-EGD (ISO/CD 13738) and J.A.S.O. FD certified oil will void the two-stroke engine warranty.

NOTICE

ECHO branded 2-stroke oils may be mixed at 50:1 ratio for application in all Echo engines sold in the past regardless of ratio specified in those manuals.

Handling Fuel

⚠ DANGER

Fuel is VERY flammable. Use extreme care when mixing, storing or handling, or serious personal injury may result.

- ***Use an approved fuel container.***
- ***DO NOT smoke near fuel.***
- ***DO NOT allow flames or sparks near fuel.***
- ***Fuel tanks/cans may be under pressure. Always loosen fuel caps slowly allowing pressure to equalize.***
- ***NEVER refuel a unit when the engine is HOT or RUNNING!***
- ***DO NOT fill fuel tanks indoors. ALWAYS fill fuel tanks outdoors over bare ground.***
- ***DO NOT overfill fuel tank. Wipe up spills immediately.***

© 1/20 ECHO Incorporated

- ***Securely tighten fuel tank cap and close fuel container after refueling.***
- ***Inspect for fuel leakage. If fuel leakage is found, do not start or operate unit until leakage is repaired.***
- ***Move at least 3m (10 ft.) from refueling location before starting the engine.***

Mixing Instructions

1. Fill an approved fuel container with half of the required amount of gasoline.
2. Add the proper amount of 2-stroke oil to gasoline.
3. Close container and shake to mix oil with gasoline.
4. Add remaining gasoline, close fuel container, and remix.

Fuel to Oil Mix - 50:1 Ratio			
US		Metric System	
Gas	Oil	Gas	Oil
Gallons	Oz.	Liter	cm^3
1	2.6	5	100
2	5.2	10	200
5	13	25	500

NOTICE

Spilled fuel is a leading cause of hydrocarbon emissions. Some states may require the use of automatic fuel shut-off containers to reduce fuel spillage.

After use

- DO NOT store a unit with fuel in its tank. Leaks can occur. Return unused fuel to an approved fuel storage container.

Storage - Fuel storage laws vary by locality. Contact your local government for the laws affecting your area. As a precaution, store fuel in an approved, airtight container. Store in a well-ventilated, unoccupied building, away from sparks and flames.

NOTICE

Stored fuel ages. Do not mix more fuel than you expect to use in thirty (30) days, ninety (90) days when a fuel stabilizer is added.

© 1/20 ECHO Incorporated

NOTICE

Stored two-stroke fuel may separate. ALWAYS shake fuel container thoroughly before each use.

Starting Cold Engine

⚠ WARNING

Hedge Trimmer blades are very sharp. Touching them may lead to severe personal injury. Avoid touching blades whenever possible, and always wear gloves to protect hands.

Note: The blade cover is used for transportation and storage. Remove blade cover before using the unit.

1. *Stop Switch*

   Move stop switch (A) away from the STOP position.

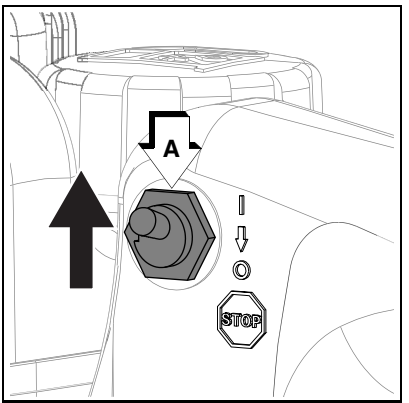

2. *Choke*

   Move choke (B) to COLD START (|⊸|) (closed) position.

3. *Purge Bulb*

   Pump purge bulb (C) until fuel is visible and flows freely in the clear fuel tank return line. Pump bulb an additional 4 or 5 times.

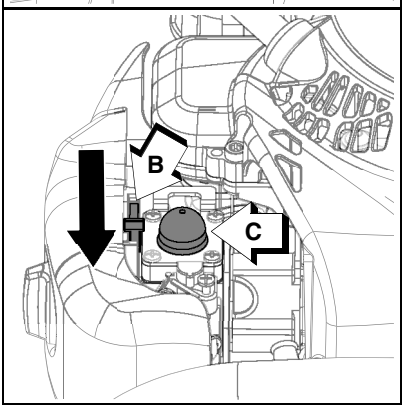

© 1/20 ECHO Incorporated

4. *Recoil Starter*

   Lay the unit on a flat, clear area. Grip the support handle securely with one hand, and pull the recoil starter handle (D) until engine fires (or 5 pulls maximum).

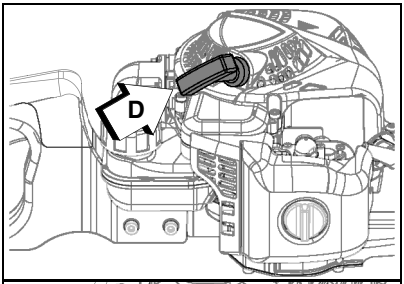

5. *Choke*

   After engine fires (or 5 pulls), move choke (B) to the RUN (|↑|) (open) position. Restart engine if necessary and allow unit to warm up at idle for several minutes.

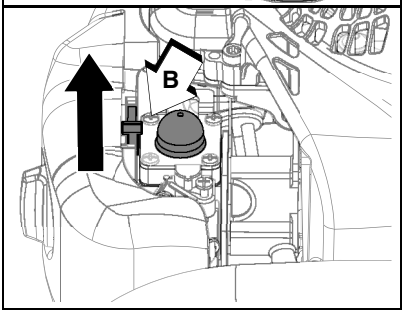

Note: If engine does not start with choke in “RUN” position after 5 pulls, repeat instructions 2 - 5.

⚠ WARNING

The blades must not move at idle, otherwise serious personal injury may result. Periodic carburetor adjustment may be necessary to assure blades do not move at idle. If blades move, readjust carburetor according to “Carburetor Adjustment” instructions in this manual or see your ECHO Dealer.

6. *Throttle Trigger*

   After engine warm-up, grip the throttle handle and support handle. Depress the throttle trigger lockout (E), and gradually depress throttle trigger (F) to increase engine RPM to operating speed.

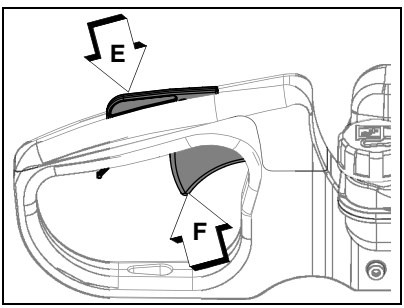

Starting Warm Engine

The starting procedure is the same as Cold Start except DO NOT close the choke.

© 1/20 ECHO Incorporated

WARNING

The blades must not move at idle, otherwise serious personal injury may result. Periodic carburetor adjustment may be necessary to assure blades do not move at idle. If blades move, readjust carburetor according to "Carburetor Adjustment" instructions in this manual or see your ECHO Dealer.

1. *Stop Switch*

   Move stop switch (A) away from the STOP position.

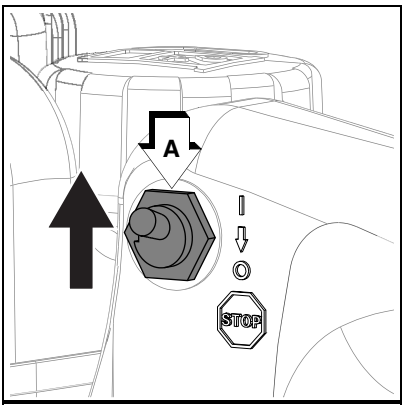

2. *Purge Bulb*

   Pump purge bulb (C) until fuel is visible and flows freely in the clear fuel tank return line. Pump bulb an additional 4 or 5 times.

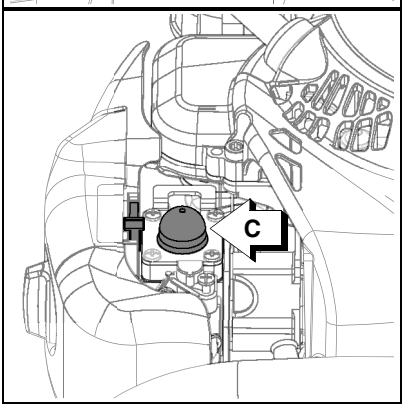

3. *Recoil Starter*

   Place the unit on a flat, clear area. Grip the support handle securely with one hand, and pull the recoil starter handle (D) until engine starts.

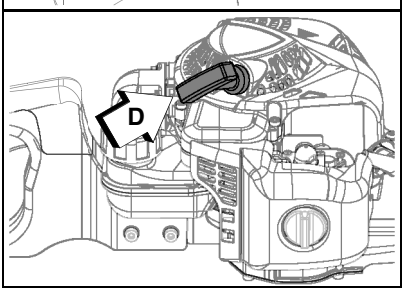

Note: If engine does not start after 5 pulls, use Cold Start Procedure.

© 1/20 ECHO Incorporated

Stopping Engine

1. *Throttle*

   Release throttle trigger (F) and allow engine to return to idle before shutting off engine.

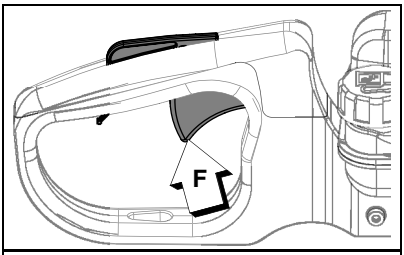

2. *Stop Switch*

   Move stop switch (A) to STOP position.

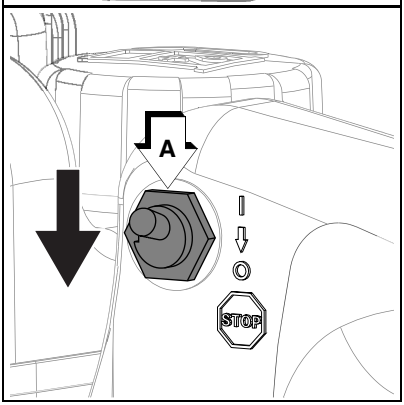

WARNING

If engine does not stop when stop switch is moved to STOP position, close choke - COLD START position - to stall engine. Have your ECHO dealer repair stop switch before using unit again.

Hedge Trimming

WARNING

Hedge Trimmer blades are very sharp. Touching them may lead to severe personal injury. Avoid touching blades whenever possible, and always wear gloves to protect hands.

© 1/20 ECHO Incorporated

1. Always grip support handle with right hand, and throttle handle with left hand.
2. Hold trimmer firmly and squeeze throttle trigger to accelerate engine.
3. Tilt trimmer so cutting teeth are angled slightly toward the hedge or shrub and proceed to cut.

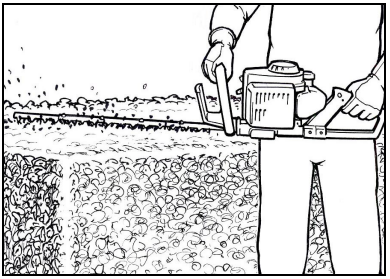

WARNING

Never remove hands from unit when blades are moving.

WARNING

The engine continues running even when the blades have stopped due to an obstruction. If this occurs, stop the engine, disconnect ignition cable and remove the obstruction.

© 1/20 ECHO Incorporated

MAINTENANCE

WARNING

Moving parts can amputate fingers or cause severe injuries. Keep hands, clothing and loose objects away from all openings. Always stop engine, disconnect spark plug, and make sure all moving parts have come to a complete stop before removing obstructions, clearing debris, or servicing unit. Allow unit to cool before performing service. Wear gloves to protect hands from sharp edges and hot surfaces.

WARNING

Operating a poorly maintained unit can result in serious injuries to operator or bystanders. Always follow all maintenance instructions as written, otherwise serious personal injury may result.

Your unit is designed to provide many hours of trouble free service. Regular scheduled maintenance will help your unit achieve that goal. If you are unsure or are not equipped with the necessary tools, we recommend that you take your unit to a Servicing Dealer for maintenance. To help you decide whether you want to DO-IT-YOURSELF or have the Dealer do it, each maintenance task has been graded. If the task is not listed, see your Dealer for repairs.

NOTICE

The use of emission control components other than those specifically designed for this unit is a violation of federal law.

Skill Levels

Level 1 = Easy to do. Common tools may be required.

Level 2 = Moderate difficulty. Some specialized tools may be required.

Level 3 = See your dealer.

Click HERE or go to http://www.echo-usa.com/products/maintenance-kit

or

HERE https://www.shindaiwa-usa.com/you-can.aspx

For information about maintenance kits.

© 1/20 ECHO Incorporated

Maintenance Intervals

COMPONENT/SYSTEM	MAINTENANCE PROCEDURE	REQUIRED SKILL LEVEL
Daily or Before Use		
Air Filter	Inspect/Clean *	1
Choke Shutter		
Fuel System	Inspect [3]	
Cooling System	Inspect/Clean	2
Recoil Starter Rope	Inspect/Clean *	1
Screws/Nuts/Bolts	Inspect/Tighten/Replace *	
Blades	Inspect/Clean [2]	
Every Refuel		
Fuel System	Inspect [3]	1
Three Months		
Air Filter	Replace *	1
Fuel Filter	Inspect *	
Fuel Cap Gasket		
Spark Plug	Inspect/Clean/Replace *	1
Muffler Spark Arrestor		2
Cylinder Exhaust Port	Inspect/Clean/De-carbon	
Gear Housing	Grease [1]	
Yearly		
Fuel Filter	Inspect/Replace *	1
Fuel Cap Gasket	Replace *	

IMPORTANT NOTE - Time intervals shown are maximum. Actual use and your experience will determine the frequency of required maintenance.

MAINTENANCE PROCEDURE NOTES:

1 Apply lithium based grease every 25 hours of use.

2 Inspect blade, and clean and sharpen as needed. Lubricate blades periodically during use.

3 Low evaporative fuel tanks DO NOT require regular maintenance to maintain emission integrity.

* Replacement is recommended based on the finding of damage or wear during inspection.

© 1/20 ECHO Incorporated

Air Filter

Level 1.

Parts Required: Tune-Up Kit

1. Close choke (B) (COLD START [|⌁|] position). This prevents dirt from entering the carburetor throat when the air filter is removed. Brush accumulated dirt from air cleaner area.

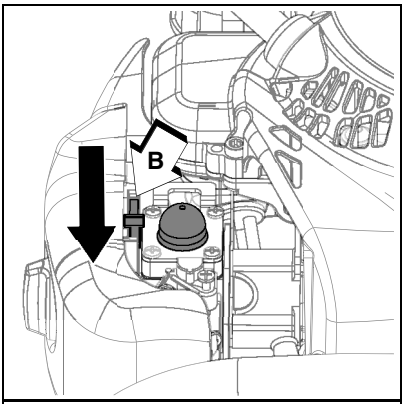

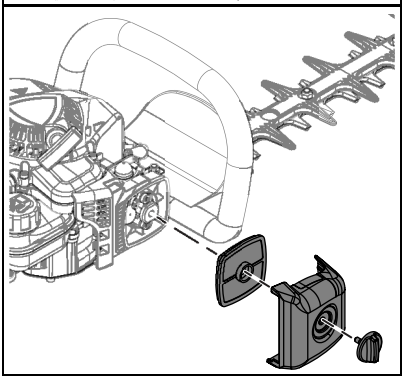

2. Remove air filter cover. Brush dirt from inside cover.
3. Replace filter if it is damaged, fuel soaked, very dirty, or the rubber sealing edges are deformed.
   - Lightly brush debris from filter.
   - Soak heavily soiled filters in water/detergent solution to loosen dirt, then brush lightly.
   - Rinse with clean water and allow to dry completely before reuse.
4. Install air filter in air filter case.
5. Install air filter cover.

Fuel Filter

Level 1.

Parts Required: Tune-Up Kit

© 1/20 ECHO Incorporated

DANGER

Fuel is VERY flammable. Use extreme care when mixing, storing or handling, or serious personal injury may result.

1. Use a clean rag to remove loose dirt from around fuel cap and empty fuel tank.
2. Pull the fuel line and filter from the tank.

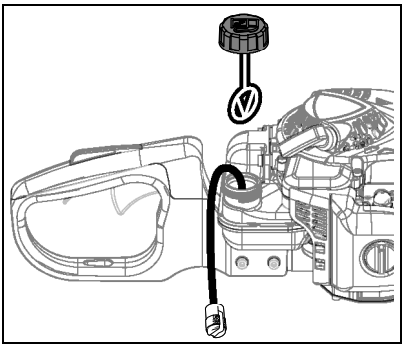

NOTICE

Do not damage fuel line while removing fuel filter from tank.

3. Remove the filter from the line and install the new filter.

Note: Federal EPA regulations require all model year 2012 and later gasoline powered engines produced for sale in the United States to be equipped with a special low permeation fuel supply hose between the carburetor and fuel tank. When servicing model year 2012 and later equipment, only fuel supply hoses certified by EPA can be used to replace the original equipment supply hose. Fines up to $37,500 may be enforced for using an un-certified replacement part.

Spark Plug

Level 2.

Parts Required: Tune-Up Kit

NOTICE

Use only NGK BPM-8Y spark plug (BPMR-8Y in Canada) otherwise severe engine damage may occur.

© 1/20 ECHO Incorporated

1. Remove spark plug and check for fouling, worn and rounded center electrode.
2. Clean the plug or replace with a new one. DO NOT sand blast to clean. Remaining sand will damage engine.
3. Adjust spark plug gap by bending outer electrode.

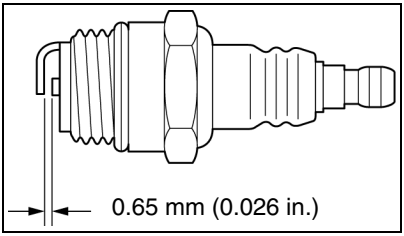

4. Tighten spark plug to 150-170 kgf • cm (130-150 in • lbf).

Cooling System

Level 2.

Parts Required: None if you are careful.

NOTICE

To maintain proper engine operating temperatures, cooling air must pass freely through the cylinder fin area. This flow of air carries combustion heat away from the engine.

Overheating and engine seizure can occur when:

- Air intakes are blocked, preventing cooling air from reaching the cylinder.
- Dust and grass build up on the outside of the cylinder. This build up insulates the engine and prevents the heat from leaving.

Removal of cooling passage blockages or cleaning of cooling fins is considered “Normal Maintenance.” Any failure attributed to lack of maintenance is not warranted.

1. Remove spark plug lead.
2. Remove muffler cover.
3. Remove starter cover.
4. Use brush (not included) to remove dirt from the cylinder fins.

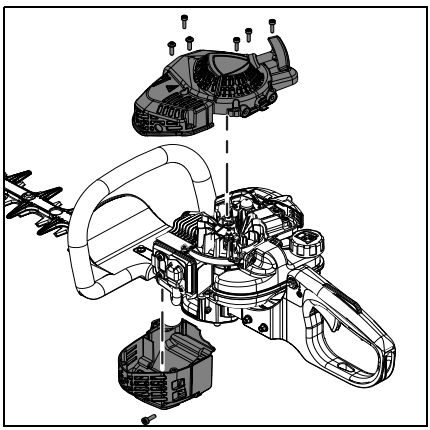

© 1/20 ECHO Incorporated

NOTICE

DO NOT use a metal scraper to remove dirt from the cylinder fins.

5. Assemble components in reverse order.

Exhaust System

Spark Arrestor Screen

Level 2.

Parts Required: Spark Arrestor Screen, Gasket

1. Remove spark plug lead.
2. Remove muffler cover.
3. Place piston at Top Dead Center (TDC) to prevent carbon/dirt from entering cylinder.
4. Remove exhaust guide (A), gasket (B), and screen (C) from muffler body.
5. Clean carbon deposits from muffler components.

Note: When cleaning carbon deposits, be careful not to damage the catalytic element inside muffler.

6. Replace screen if it is cracked, plugged, or has holes burned through.
7. Assemble components in reverse order.

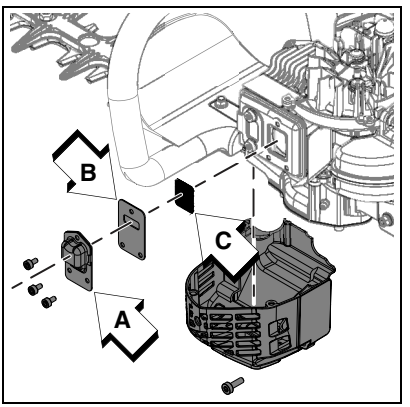

Exhaust Port Cleaning

Level 2.

Parts Required: As needed: Heat Shield

© 1/20 ECHO Incorporated

1. Remove spark plug lead from spark plug, and remove muffler cover.
2. Place piston at top dead center. Remove muffler (A) and heat shield (B).

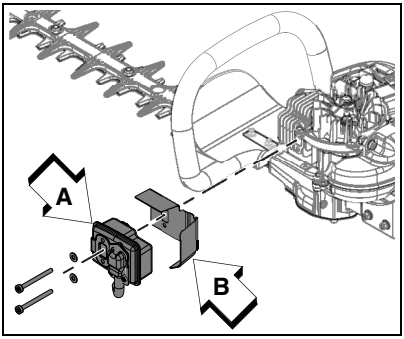

NOTICE

Never use a metal tool to scrape carbon from the exhaust port. Do not scratch the cylinder or piston when cleaning the exhaust port. Do not allow carbon particles to enter the cylinder.

3. Use a wood or plastic scraping tool (not included) to clean deposits from cylinder exhaust port.
4. Inspect heat shield, and replace if damaged.
5. Install heat shield, muffler, and eye plate.
6. Tighten muffler mounting bolts (or nuts) to 90-110 kgf•cm (80-95 in•lbf).
7. Install muffler cover and attach spark plug lead.
8. Start engine, and warm to operating temperature.
9. Stop engine, and re-tighten mounting bolts (or nuts) to specifications.

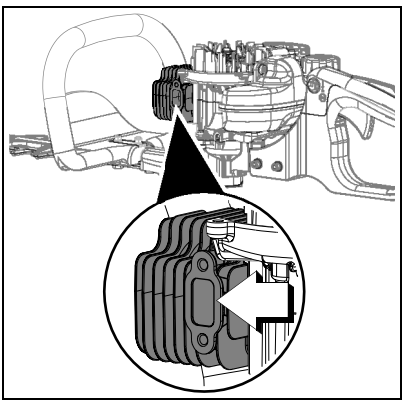

© 1/20 ECHO Incorporated

Carburetor Adjustment

WARNING

The blades must not move at idle, otherwise serious personal injury may result. Periodic carburetor adjustment may be necessary to assure blades do not move at idle.
If blades move, readjust carburetor according to these instructions, or see your ECHO Dealer.

Engine Break-In

New engines must be operated a minimum duration of two tanks of fuel break-in before carburetor adjustments can be made. During the break-in period your engine performance will increase and exhaust emissions will stabilize. Idle speed can be adjusted as required.

High Altitude Operation

This engine has been factory adjusted to maintain satisfactory starting, emission, and durability performance up to 1,100 feet above sea level (ASL) (96.0 kPa). To maintain proper engine operation above 1,100 feet ASL the carburetor may need to be adjusted by an authorized ECHO service dealer.

NOTICE

If the engine is adjusted for operation above 1,100 feet ASL, the carburetor must be re-adjusted when operating the engine below 1,100 feet ASL, otherwise severe engine damage may result.

Level 2.

Parts Required: None

Note: Every unit is run at the factory and the carburetor is set in compliance with emission regulations. Carburetor adjustments, other than idle speed, must be performed by an authorized ECHO dealer.

© 1/20 ECHO Incorporated

1. Check idle speed and reset if necessary. If a tachometer is available, idle speed screw (A) should be set to the specifications found on “Specifications” page of this manual. Turn idle screw (A) clockwise to increase idle speed; counter clockwise to decrease idle speed.

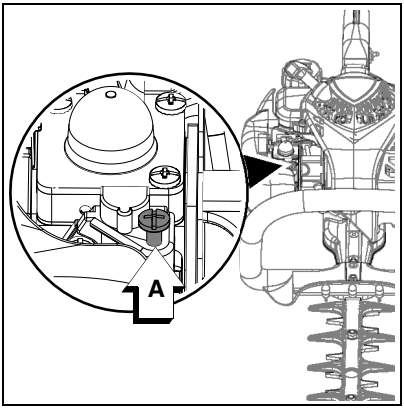

WARNING

When carburetor adjustment is completed, the cutting attachment should not move at idle, otherwise serious personal injury may result.

Lubrication

Blades

Level 1.

Parts Required: Echo RedArmor™ Blade Cleaner & Lubricant, or 20W Engine Oil (blade lubrication), 50-50 mixture of kerosene and 20W oil (blade cleaning)

WARNING

Hedge Trimmer blades are very sharp. Touching them may lead to severe personal injury. Avoid touching blades whenever possible, and always wear gloves to protect hands.

1. Move stop switch to stop position.
2. Disconnect spark plug wire from spark plug.
3. Brush loose debris from blade and coat both sides of blade with the 50-50 cleaning mixture.

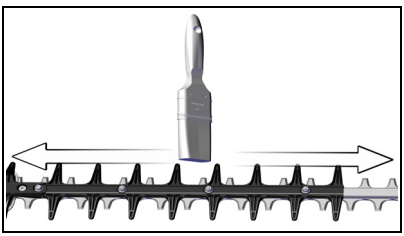

© 1/20 ECHO Incorporated

4. Allow cleaning mixture to soften the remaining gummy residue then wipe it from the blade.
5. Apply clean oil to the entire length of the blade. Be certain the blade bolts are lubricated.
6. Wipe excess oil from the blade before putting the unit back in service.

Gear Box

Level 1.

Parts Required: Lithium Based Grease.

1. Clean dirt from the grease fitting (A).
2. Apply 1-2 pumps of grease into fitting, DO NOT over fill. Leave room for the grease to expand during operation
3. Wipe excess grease from around grease fitting.

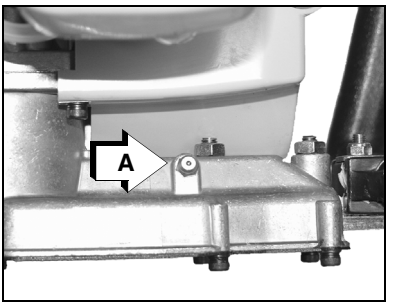

Blades

WARNING

Hedge trimmer blades are very sharp, touching them may lead to severe personal injury. Use long hex wrenches and sockets with extensions when tightening blade screws and blade lock nuts to keep hands at a safe distance from sharp blades.

NOTICE

Blades should only be removed and reinstalled by an authorized servicing dealer, otherwise premature wear or internal damage may occur.

Sharpening

Level 2.

NOTICE

If a power grinder is used DO NOT allow blade to over heat.

© 1/20 ECHO Incorporated

1. Move stop switch to STOP position.
2. Disconnect spark plug wire.
3. Remove blade guard.
4. Slide blades to allow file clearance using slots (A) on bottom of blade. Do not pry against cutting edges.
5. File each edge carefully. Follow the original shape of the blade.
6. Install blade guard.

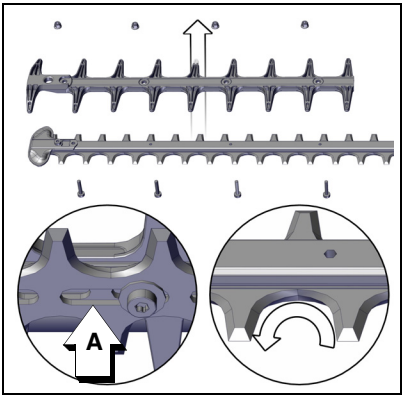

NOTICE

Use new lock nuts each time blade guard is installed. See dealer for correct nuts.

7. Lubricate blades (see “Lubrication”).
8. Connect spark plug wire.

Adjustment

Level 2.

NOTICE

Locking ability of hedge trimmer blade lock nuts will diminish each time they are removed. Replace if turning resistance is not felt when installing lock nuts.

1. Tighten blade screws securely.
2. Hold blade screws (A) to prevent turning, and tighten lock nuts (B).

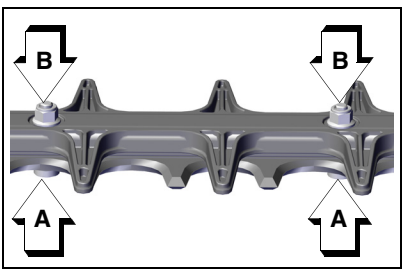

© 1/20 ECHO Incorporated

TROUBLESHOOTING

ENGINE PROBLEM TROUBLESHOOTING CHART				
Problem	**Check**	**Status**	**Cause**	**Remedy**
Engine starts hard or Engine does not start	Fuel at carburetor	No fuel at carburetor	Fuel strainer or fuel line obstructed	Clean or replace See your dealer
	Fuel at cylinder	No fuel at cylinder	Carburetor	See your dealer
Engine starts hard or Engine does not start		Muffler wet with fuel	Fuel mixture too rich	OPEN choke Clean or replace air filter Adjust carburetor See your dealer
	Spark at end of plug wire	No spark	Stop switch OFF - Electrical problem - Inter-lock switch	Turn switch to ON See your dealer
	Spark at plug		Incorrect gap - Covered with carbon - Fouled with fuel - Plug defective	Adjust to 0.65mm (0.026 in.) Clean or replace plug
Engine runs, but dies or Engine does not acceler-ate properly	Air filter	Air filter dirty	Normal wear	Clean or replace
	Fuel filter	Fuel filter dirty	Contaminants or residue in fuel	Replace filter or replace fuel
	Fuel vent	Fuel vent plugged	Contaminated fuel	Clean or replace

© 1/20 ECHO Incorporated

ENGINE PROBLEM TROUBLESHOOTING CHART				
Problem	**Check**	**Status**	**Cause**	**Remedy**
Engine runs, but dies or Engine does not acceler-ate properly	Spark plug	Plug dirty or worn	Normal wear	Clean and adjust or replace
	Carburetor	Improper adjustment	Vibration	Adjust
	Cooling system	Cooling system dirty or plugged	Extended oper-ation in dirty or dusty locations	Clean
	Spark arrestor screen	Spark arrestor screen plugged	Normal wear	Replace
Engine does not crank	N/A		Internal engine problem	See your dealer

DANGER

Fuel vapors are extremely flammable and may cause fire and/or explosion. Never test for ignition spark by grounding spark plug near cylinder plug hole, otherwise serious personal injury may result.

© 1/20 ECHO Incorporated

STORAGE

WARNING

The muffler and surrounding cover become hot during operation. Always keep exhaust area clear of flammable debris during transportation or when storing, otherwise serious property damage or personal injury may result.

WARNING

Hedge Trimmer blades are very sharp. Touching them may lead to severe personal injury. Avoid touching blades whenever possible, and always wear gloves to protect hands.

DANGER

Do not store in enclosure where fuel fumes may accumulate or reach an open flame or spark, otherwise serious personal injury may result.

NOTICE

Always store and transport hedge trimmers in a stable, horizontal position. Support gear case and cutting blades to prevent excessive flexing, which may cause damage to these components. Always install blade cover when transporting or storing unit.

Long Term Storage (Over 30 Days)

Do not store your unit for a prolonged period of time (30 days or longer) without performing protective storage maintenance which includes the following:

1. Store unit in a dry, dust free place, out of the reach of children.
2. Place the stop switch in the “STOP” position.
3. Remove accumulation of grease, oil, dirt and debris from exterior of unit.
4. Perform all periodic lubrication and services that are required.
5. Apply clean oil to the entire length of the blade. Be certain the blade bolts are lubricated.
6. Install blade cover on blades.
7. Tighten all the screws and nuts.

© 1/20 ECHO Incorporated

8. Drain fuel tank completely. Press purge bulb 6-7 times to remove remaining fuel from carburetor then drain the tank again. Close choke, start and run the engine until it stops due to lack of fuel.
9. Allow engine to cool. Remove the spark plug lead from the spark plug. Remove the spark plug. Pour 7 cc (0.25 oz.) of fresh, clean, two-stroke engine oil into the cylinder through the spark plug hole.
   a. Place a clean cloth over the spark plug hole.
   b. Pull the recoil starter handle 2-3 times to distribute the oil inside the engine.
   c. Observe the piston location through the spark plug hole. Pull the recoil handle slowly until the piston reaches the top of its travel and leave it there.
10. Install the spark plug. Connect the spark plug lead to the spark plug.

© 1/20 ECHO Incorporated

SPECIFICATIONS

MODEL	HC-2020
Length	1064 mm (41.9 in.)
Width	266 mm (10.5 in.)
Height	198 mm (7.8 in.)
Weight (dry)	4.5 kg (10 lb.)
Engine Type	Air cooled, two-stroke, single cylinder gasoline engine
Bore	32.2 mm (1.27 in.)
Stroke	26.0 mm (1.02 in.)
Displacement	21.2 cc (1.29 cu. in.)
Exhaust	Spark arrestor muffler or spark arrestor muffler with catalyst
Carburetor	Diaphragm w/purge pump
Ignition System	Flywheel magneto, capacitor discharge ignition type
Spark Plug	NGK BPMR8Y (Gap 0.65 mm (0.026 in.)
Fuel	Mixed (Gasoline and Two-stroke Oil)
Fuel/Oil Ratio	50:1
Gasoline	Use 89 Octane unleaded. Do not use fuel containing methyl alcohol, more than 10% ethyl alcohol or 15% MTBE. Do not use alternative fuels such as E-15 or E-85.
Oil	ISO-L-EGD (ISO/CD 13738) and J.A.S.O. M345- FD, two-stroke, air-cooled engine oil.
Fuel Tank Capacity	0.39 lit. (13.2 US fl. oz.)
Starter System	Automatic Recoil Starter
Clutch	Centrifugal Type
Gear Case Ratio	5.88
Cutter	Double Reciprocating Blade, Double Edge
Length	656mm (25.83in.)
Pitch	35 mm (1.38 in.)
Height	21mm (0.83 in.)
Maximum Diameter Cut:	
Soft Material	25.4 mm (1 in.)
Woody Material	13 mm (1/2 in.)
Idle Speed	3,300 RPM
Clutch Engagement Speed	5,200 RPM

© 1/20 ECHO Incorporated

MODEL	HC-2020
Wide Open Throttle Speed (W.O.T.)	10,400 RPM

© 1/20 ECHO Incorporated

U32926001001 - U32926999999

ECHO INCORPORATED
400 Oakwood Road
Lake Zurich, IL 60047
www.echo-usa.com