Operator's Manual SRM-410X Grass Trimmer / Brushcutter

⚠ WARNING

The engine exhaust from this product contains chemicals known to the State of California to cause cancer, birth defects, or other reproductive harm.

⚠ WARNING

Read and understand all provided literature before use. Failure to do so could result in serious injury.

Note: This product complies with CAN ICES-2/NMB-2.

X7502168402

© 11/25 ECHO Incorporated

TABLE OF CONTENTS

Introduction 3
Servicing Information 4
Parts and Serial Number 4
Service 4
ECHO Consumer Product Support 4
Product Registration 4
Additional Literature 4
Safety 5
Manual Safety Symbols and Important Information 5
International Symbols 6
Personal Condition and Safety Equipment 8
Equipment 12
Emission Control 14
CARB and EPA Emission Control Information 14
Description 15
Contents 17
Assembly 18
Support Handle Installation 18
Shield Installation 18
Line Head Installation 19
Balance and Adjust Unit 20
Operation 21
Operation with Blades 21
Blade Selection 23
Fuel 25
Starting Cold Engine 28
Starting Warm Engine 30
Stopping Engine 31
Applications 32
Operating Techniques - Nylon Line Head 32
Operating Techniques - Metal or Plastic Blade 33
Reaction Forces 34
Blade Cutting Problems 36
Maintenance 37
Skill Levels 37
Maintenance Intervals 38
Air Filter 39
Fuel Filter 40
Spark Plug 41
Cooling System 42
Exhaust System 43
Carburetor Adjustment 45
Lubrication 46
Nylon Line Head Disassembly Instructions 47
Nylon Line Replacement 47
Sharpening Metal Blades 49
Troubleshooting 51
Storage 53
Transportation 53
Short-Term Storage 53
Long-Term Storage (Over 30 Days) 53
Specifications 56

Product Registration 58

© 11/25 ECHO Incorporated

INTRODUCTION

Specifications, descriptions, and illustrative material in this literature are as accurate as possible. Specifications are subject to change without notice. Illustrations might include optional equipment and accessories, and might not include all standard equipment. Your equipment might appear slightly different than pictured equipment.

Read and understand all provided literature. Literature contains specifications and information for safety, operation, maintenance, storage, and assembly specific to this product. Scan QR codes for more information.

For additional literature, including safety manuals where applicable, or questions regarding terms used in this manual, visit:

https://www.echo-usa.com/manuals

OR

https://www.shindaiwa-usa.com/manuals

© 11/25 ECHO Incorporated

SERVICING INFORMATION

Parts and Serial Number

Genuine ECHO parts and assemblies for your ECHO products are available only from an Authorized Service Dealer. When you do need to buy parts, always have the model number and serial number of the unit with you. Image shows serial number location. For future reference write them in the space provided below.

Model No. _____ Serial No. _____

Service

Service of this product during the warranty period must be performed by an Authorized Service Dealer. For the name and address of the Authorized Service Dealer nearest you, ask your retailer or call 1-800-432-ECHO (3246). Authorized Service Dealer information is also available on our website https://www.echo-usa.com. When presenting your unit for warranty service/repairs, proof of purchase is required.

ECHO Consumer Product Support

If you require assistance or have questions concerning the application, operation, or maintenance of this product, call the ECHO Consumer Product Support Department at 1-800-432-ECHO (3246) from 8:00 a.m. to 5:00 p.m. (Central Standard Time) Monday through Friday. Before calling, please know the model and serial number of your unit.

Product Registration

Register your ECHO equipment online at https://www.echo-usa.com or by filling out the product registration sheet included in this manual. Registering your product confirms warranty coverage and provides a direct link to ECHO if we find it necessary to contact you.

Additional Literature

In addition to finding information online, information is available from your Authorized Service Dealer, or by contacting ECHO Incorporated, 400 Oakwood Road, Lake Zurich, IL 60047, 1-800-432-ECHO (3246).

© 11/25 ECHO Incorporated

SAFETY

Manual Safety Symbols and Important Information

Throughout this manual and on the product itself, you will find safety alerts and helpful, informational messages preceded by symbols or key words. The following is an explanation of those symbols and key words and what they mean to you.

DANGER

The safety alert symbol accompanied by the word "DANGER" calls attention to an act or condition which WILL lead to serious personal injury or death if not avoided.

WARNING

The safety alert symbol accompanied by the word "WARNING" calls attention to an act or condition which COULD lead to serious personal injury or death if not avoided.

CAUTION

The safety alert symbol accompanied by the word "CAUTION" calls attention to an act or condition which might lead to minor or moderate personal injury if not avoided.

NOTICE

The enclosed message provides information necessary for the protection of the unit.

Note: This enclosed message provides tips for use, care and maintenance of the unit.

CIRCLE AND SLASH SYMBOL
This symbol means the specific action shown is prohibited. Ignoring these prohibitions can result in serious or fatal injury.

© 11/25 ECHO Incorporated

International Symbols

Symbol	Description	Symbol	Description
	Warning, see operator's manual.	H	Carburetor adjustment (high speed)
	Wear eye, ear and head protection.	T	Carburetor adjustment (idle speed)
	Wear hand and foot protection.	L	Carburetor adjustment (low speed)
	Safety/Alert	STOP	STOP switch
	Hot surface		Fuel and oil mixture
	Do not allow flames or sparks near fuel.	Ignition ON I OFF O	Ignition ON / OFF
	Do not smoke near fuel.		Purge bulb
	Choke control RUN position (choke open)		Choke control COLD START position (choke closed)

© 11/25 ECHO Incorporated

Symbol	Description	Symbol	Description
	Keep feet away from blade.		Rotating cutting attachment.
	Thrown objects		Direction of blade
	Do not use line heads, use blades only.		Do not use blades, use line heads only.
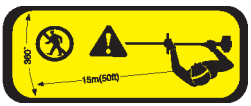		Keep bystanders and helpers away 15 m (50 ft.).	
		Avoid kick-out. Keep bystanders and helpers away 15 m (50 ft.).	
		Beware of thrown objects. Wear eye protection.	

Note: Not all symbols will appear on your unit.

© 11/25 ECHO Incorporated

Personal Condition and Safety Equipment

WARNING

Cancer and Reproductive Harm
https://www.P65Warnings.ca.gov

WARNING

The muffler or catalytic muffler and surrounding cover may become extremely hot. If unit is equipped with muffler, always keep clear of exhaust and muffler area, otherwise serious personal injury might occur.

WARNING

Users of this product risk injury to themselves and others if the unit is used improperly and/or safety precautions are not followed. Proper clothing and safety gear must be worn when operating unit.

Physical Condition

Your judgment and physical dexterity may not be good:

- If you are tired or sick
- If you are taking medication
- If you have taken alcohol or drugs

Operate unit only if you are physically and mentally well.

Eye Protection

WARNING

- **Eye protection that meets ANSI Z87.1 or CE requirements must be worn whenever you operate the unit.**
- **For additional safety, a full-face shield (not included) can be worn over safety glasses or goggles to provide protection from sharp branches or flying debris.**

Hand Protection

Wear sturdy, no-slip, rubber work gloves to improve your grip on the handles. Gloves also provide protection against cuts and scratches, cold environments, and reduce the transmission of machine vibration to your hands.

© 11/25 ECHO Incorporated

Hearing and Ear Protection

ECHO recommends wearing personal protective equipment whenever unit is used.

Breathing Protection

Operators who are sensitive to dust or other common airborne allergens may need to wear a dust mask to prevent inhaling these materials while operating unit. Dust masks can provide protection against dust, plant debris, and other plant matter such as pollen. Make sure the mask does not impair your vision, and replace the mask as needed to prevent air restrictions.

Proper Clothing

Wear snug-fitting, durable clothing:

- Pants should have long legs, shirts should have long sleeves.
- Do not wear shorts.
- Do not wear ties, scarves, jewelry, or clothing with loose or hanging items that could become entangled in moving parts or surrounding growth.
- Keep clothing buttoned or zipped, and keep shirt tails tucked in.
- Wear sturdy work shoes with nonskid rubber soles.
- Do not wear open toed shoes.
- Do not operate unit with bare feet.
- Keep long hair away from engine and air intake. Retain hair with cap or net.

Heavy protective clothing can increase operator fatigue, which may lead to heat stroke. Schedule heavy work for early morning or late afternoon hours when temperatures are cooler.

⚠ WARNING

The components of this machine generate an electromagnetic field during operation, which can interfere with some pacemakers. To reduce the risk of serious or fatal injury, persons with pacemakers should consult with their physician and the pacemaker manufacturer before operating this machine. In the absence of such information, ECHO does not recommend the use of this machine by anyone who has a pacemaker.

© 11/25 ECHO Incorporated

Extended Operation and Extreme Conditions

CAUTION

Prolonged exposure to cold and/or vibration can result in injury. Read and follow all safety and operation instructions to minimize risk of injury. Failure to follow instructions can result in painful wrist/hand/arm injuries.

It is believed that a condition called Raynaud's Phenomenon, which affects the fingers of certain individuals, may be brought about by exposure to vibration and cold. Exposure to vibration and cold may cause tingling and burning sensations, followed by loss of color and numbness in the fingers. The following precautions are strongly recommended, because the minimum exposure which might trigger the ailment is unknown.

- Keep your body warm, especially the head, neck, feet, ankles, hands, and wrists.
- Maintain good blood circulation by performing vigorous arm exercises during frequent work breaks, and also by not smoking.
- Limit the hours of operation. Try to fill each day with jobs where operating the unit or other hand-held power equipment is not required.
- If you experience discomfort, redness, and swelling of the fingers followed by whitening and loss of feeling, consult your physician before further exposing yourself to cold and vibration.

Repetitive Stress Injuries (RSI)

It is believed that overusing the muscles and tendons of the fingers, hands, arms, and shoulders may cause soreness, swelling, numbness, weakness, and extreme pain in those areas. Certain repetitive hand activities may put you at a high risk for developing a Repetitive Stress Injury (RSI). An extreme RSI condition is Carpal Tunnel Syndrome (CTS), which could occur when your wrist swells and squeezes a vital nerve that runs through the area. Some believe that prolonged exposure to vibration may contribute to CTS. CTS can cause severe pain for months or even years.

© 11/25 ECHO Incorporated

To reduce the risk of RSI/CTS, do the following:

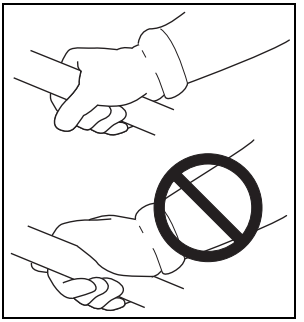

- Avoid using your wrist in a bent, extended, or twisted position. Instead try to maintain a straight wrist position. Also, when grasping, use your whole hand, not just the thumb and index finger.
- Take periodic breaks to minimize repetition and rest your hands.
- Reduce the speed and force with which you do the repetitive movement.
- Do exercises to strengthen the hand and arm muscles.
- Immediately stop using all power equipment and consult a doctor if you feel tingling, numbness, or pain in the fingers, hands, wrists, or arms. The sooner RSI/CTS is diagnosed, the more likely permanent nerve and muscle damage can be prevented.

DANGER

All overhead electrical conductors and communications wires can have electricity flow with high voltages. This unit is not insulated against electrical current. Never touch wires directly or indirectly, otherwise serious injury or death can result.

DANGER

Do not operate gas-powered products indoors or in inadequately ventilated areas. Engine exhaust contains poisonous emissions and can cause serious injury or death.

Read Manuals

- Provide all users of this equipment with literature for instructions on safe operation.

Clear the Work Area

- Always clear the work area of foreign objects such as rocks, broken glass, nails, wire, or string, and check for any hidden hazards. Spectators and fellow workers must be warned, and children and animals prevented from coming nearer than 15 m (50 ft.) while the unit is in use.
- Outside the 15 m (50 ft.) zone, there is still a risk of injury from thrown objects.
- Bystanders should be encouraged to wear eye protection.
- If you are approached, stop the engine and cutting attachment.

© 11/25 ECHO Incorporated

- When a bladed unit is used, there is the added risk of injury to bystanders being struck with the moving blade in the event of a blade thrust or other unexpected reaction of the blade.

Keep a Firm Grip

- Always hold throttle handle and support handle with thumbs and fingers tightly encircling the handles.

Keep a Solid Stance

- Maintain footing and balance at all times. Do not stand on slippery, uneven or unstable surfaces. Do not work in odd positions or on ladders. Do not overreach.
- Keep cutting attachment below waist.
- Keep all body parts away from rotating cutting attachment.

Avoid Hot Surfaces

- If unit is equipped with muffler, keep exhaust area clear of flammable debris. Avoid contact during and immediately after operation.

Equipment

WARNING

Use only approved attachments. Serious injury may result from the use of a non-approved attachment combination. ECHO Incorporated will not be responsible for the failure of cutting devices, attachments or accessories which have not been tested and approved by ECHO Incorporated. Read and comply with all safety instructions.

- **Do not attempt to modify this product. Serious injury can result from the use of any modified product.**
- **Check unit for loose or missing nuts, bolts, and screws. Tighten or replace as needed.**
- **Inspect shield for damage and ensure that shield is properly installed, and that the cut-off knife is securely in place. Replace if either is damaged or missing.**
- **Check that the cutting attachment is firmly attached and in safe operating condition.**
- **Ensure that manufacturer recommended flexible non-metallic line is installed in the trimmer head.**

© 11/25 ECHO Incorporated

- **Ensure that throttle trigger, throttle trigger lockout, and stop switch all work properly.**
- **Check that handle and harness (if included) are installed and adjusted for safe, comfortable operation. See Assembly Section for proper adjustment.**

⚠ WARNING

Moving parts can amputate fingers or cause severe injuries. Keep hands, clothing and loose objects away from all openings.

- **Always stop engine, disconnect spark plug, and make sure all moving parts have come to a complete stop before disassembling unit, removing obstructions, clearing debris, or servicing unit.**
- **Do not connect spark plug lead to spark plug until unit is ready for use.**
- **Do not start or operate unit unless all guards and protective covers are properly assembled to unit.**
- **Never reach into any opening while the engine is running. Moving parts may not be visible through openings.**
- **Position wiring safely to prevent snagging, separation of connectors, or breakage during operation. Gather excess wire, and secure with wiring clamp if provided on equipment, or tuck behind the air filter area. Do not place wiring directly against hot engine components.**
- **Check wiring and connectors for nicks, cuts, exposed wire, or other damage, and repair or replace as needed. Exposed wire or connectors can cause shocks, sparks, and risk of fire or explosion, resulting in serious injury.**
- **Check wire terminals for secure connections.**

⚠ WARNING

Periodically check fuel system (fuel lines, vent, grommet, fuel tank, and fuel cap) for leaks especially if the unit is dropped. If damage or leaks are found, do not use unit, otherwise serious personal injury or property damage may occur. Have unit repaired by an Authorized Service Dealer before using.

© 11/25 ECHO Incorporated

EMISSION CONTROL

CARB and EPA Emission Control Information

EMISSION CONTROL INFORMATION
ENGINE FAMILY: EEHXS.0214EQ DISPLACEMENT: 21.2cc
EMISSION COMPLIANCE PERIOD: 50Hours
THIS ENGINE MEETS 2013 U.S.EPA EXH/EVP & CALIFORNIA
EXH/EVP EMISSION REGULATIONS FOR S.O.R.E. REFER TO OWNER'S
MANUAL FOR MAINTENANCE SPECIFICATIONS AND ADJUSTMENTS.
YAMABIKO CORP. MMM/YYYY E

The emission control system for the engine is EM (engine modification) and, if the second to last character of the Engine Family on the Emission Control Information label (sample below) is “B”, “C”, “K”, or “T”, the emission control system is EM and TWC (3-way catalyst). The fuel tank/fuel line emission control system is EVAP (evaporative emissions). Evaporative emissions for California models are only applicable to fuel tanks and fuel feed lines.

An **Emission Control Label** is located on the engine. (This is an EXAMPLE ONLY, information on label varies by engine FAMILY).

EMISSION CONTROL INFORMATION
ENGINE FAMILY: CEHXS.0214KL DISPLACEMENT: 21.2cc
EMISSION COMPLIANCE PERIOD: 300Hours
THIS ENGINE MEETS 2012 U.S. EPA EXH/EVP & CALIFORNIA
EXH/EVP EMISSION REGULATIONS FOR S.O.R.E. REFER TO OWNER'S
MANUAL FOR MAINTENANCE SPECIFICATIONS AND ADJUSTMENTS.
YAMABIKO CORP. MMM/YYYY E

Product Emission Durability (Emission Compliance Period)

The 50 or 300 hour emission compliance period is the time span selected by the manufacturer certifying the engine emissions output meets applicable emissions regulations, provided that approved maintenance procedures are followed as listed in the Maintenance Section of this manual.

© 11/25 ECHO Incorporated

DESCRIPTION

Locate the safety decal(s) on your unit. Make sure the decal(s) is legible and that you understand and follow the instructions on it. If a decal cannot be read, a new one can be ordered from your ECHO dealer. The safety decal is for example only. Your label may appear slightly different.

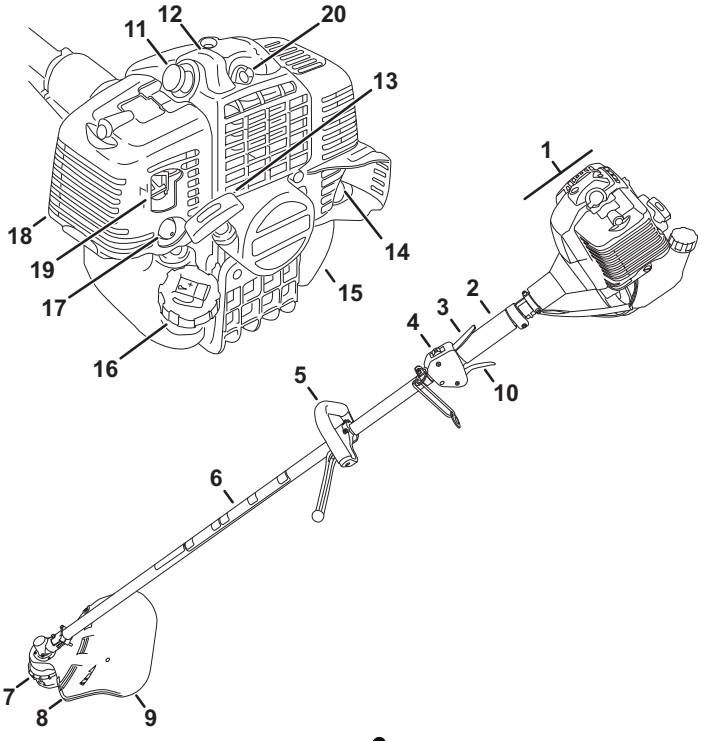

US Model – Modelo de EE. UU. – Modèle américain

Canadian Model – Modelo canadiense – Modèle canadien

© 11/25 ECHO Incorporated

1. Power head
2. Throttle handle - for right hand
3. Throttle trigger lockout
4. Stop switch
5. Support handle - for left hand
6. Drive shaft assembly
7. Nylon cutter head
8. Debris shield with cut-off knife
9. Cut-off knife
10. Throttle trigger
11. Spark plug
12. Arm rest
13. Recoil starter handle
14. Spark arrester muffler or spark arrester muffler with catalyst
15. Fuel tank
16. Fuel tank cap
17. Purge bulb
18. Air cleaner
19. Choke
20. Decompression device

© 11/25 ECHO Incorporated

CONTENTS

The ECHO product you purchased has been factory pre-assembled for your convenience. Due to packaging restrictions, some assembly may be necessary.

After opening the carton, check for damage. Immediately notify your retailer or ECHO Dealer of damaged or missing parts. Use the contents list to check for missing parts.

1	Power head / drive shaft assembly
1	Operator’s manual
1	Loop handle
1	Lower handle bracket with barrier bar
4	Bolts (handle to shaft)
4	Nuts (handle to shaft)
1	Shield base
1	Shield plate
3	Screws (shield to gear case)
1	Shield with cut-off knife
1	Shield without cut- off knife
1	Shoulder harness
1	Nylon line head
1	Warranty statement

© 11/25 ECHO Incorporated

ASSEMBLY

Support Handle Installation

1. Position support handle (A) on shaft and install barrier bar (B) using screws (C) and nuts (D). Support handle (A) must be at least 250 mm (10 in.) from center of rear handle grip.
2. Adjust support handle (A) position for comfortable operation, and tighten screws (C) securely.

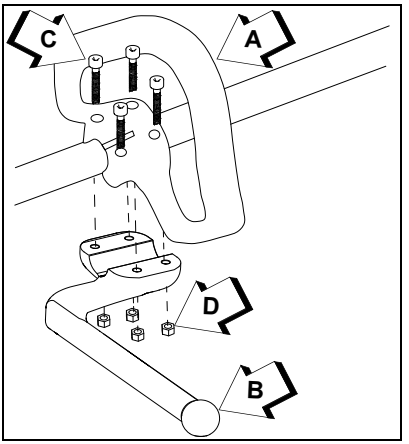

Shield Installation

1. Attach shield base (D) to gear case flange (E). Secure shield base with shield plate (F) and screws (G).

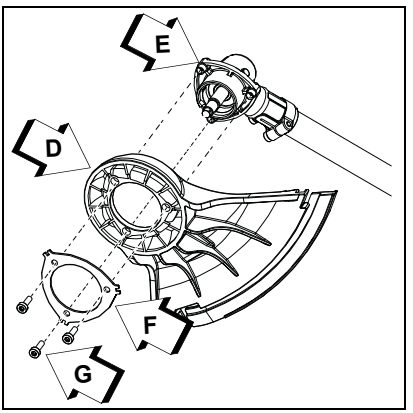

© 11/25 ECHO Incorporated

2. Slide shield with cut-off knife (H) onto shield base. Secure shield with bolt (I) and nut (J).

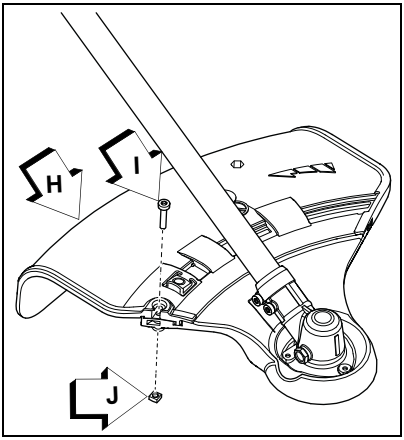

Changing Shields

1. Remove bolt (I) and nut (J).
2. Press tab (K) and slide shield with cut-off knife off shield base.
3. Install shield without cut-off knife as in previous section.

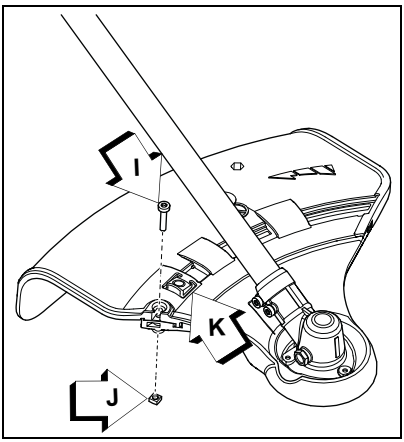

Line Head Installation

1. Install fixing plate (L) onto PTO shaft (M).

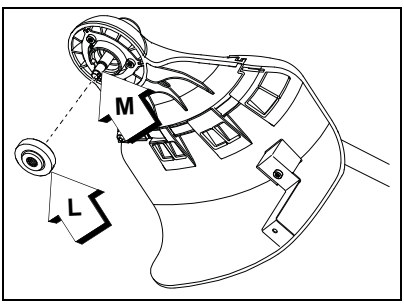

© 11/25 ECHO Incorporated

2. Align hole in fixing plate with notch in edge of gear housing and insert head locking tool (N)
3. Thread line head (O) onto PTO shaft by turning it counterclockwise until head is tight against fixing plate.

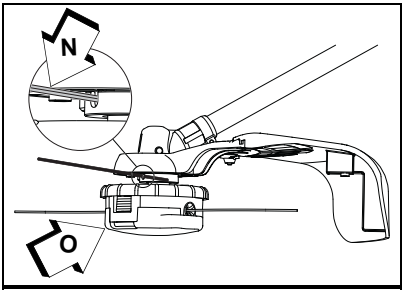

Balance and Adjust Unit

1. Loosen hanger clamp screw (A).
2. Put on harness.
3. Attach harness clip to hanger.

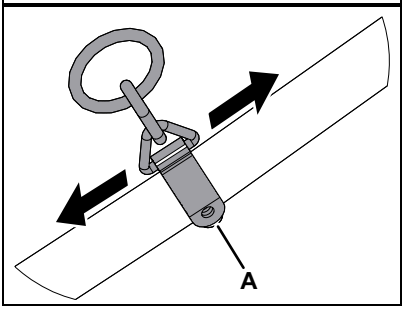

4. Slide hanger assembly forward or backward until unit balances with head or blade 200 mm +/- 100 mm (8 in. +/- 4 in.) from ground (B).
5. Tighten harness clamp screw.
6. Loosen handle clamp screws, and position handle for comfortable operation.
7. Tighten handle clamp screws.

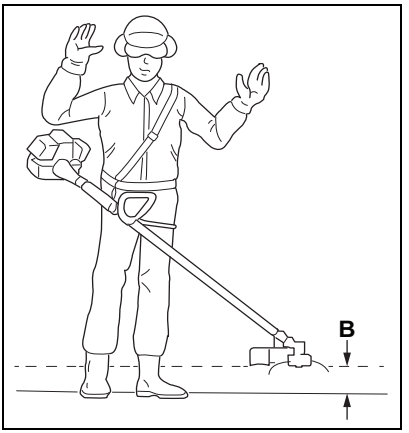

© 11/25 ECHO Incorporated

OPERATION

WARNING

Moving parts can amputate fingers or cause severe injuries. Keep hands, clothing and loose objects away from all openings. Always stop engine, disconnect spark plug, and make sure all moving parts have come to a complete stop before removing obstructions, clearing debris, or servicing unit.

WARNING

Engine exhaust is hot, and contains Carbon Monoxide (CO), a poison gas. Breathing CO can cause unconsciousness, serious injury, or death. Exhaust can cause serious burns. Always position unit so that exhaust is directed away from your face and body.

WARNING

Operation of this equipment may create sparks that can start fires around dry vegetation. This unit is equipped with a spark arrester to prevent discharge of hot particles from the engine. Metal cutters can also create sparks if the cutter strikes rocks, metal, or other hard objects. Contact local fire authorities for laws or regulations regarding fire prevention requirements.

Operation with Blades

WARNING

Metal blades are very sharp and can cause severe injuries, even if unit is off and blades are not moving. Avoid contact with blades. Wear gloves to protect hands.

WARNING

Blade use demands specific brushcutter configuration. Operation without specified shield, barrier bar or U-handle, and harness can result in serious personal injury. Follow installation instructions.

© 11/25 ECHO Incorporated

MATERIAL TO BE CUT		GRASS	WEED/ GRASS	WEED/ GRASS	BRUSH <12.7 MM (0.5 in.)	CLEARING <63.5 MM (2.5 in.)
Cutting Attachment		Nylon line head	Maxi-Cut head / Pro Maxi-Cut Head	3-tooth blade / 8-tooth blade	80-tooth blade	22-tooth blade
You must install these parts	Shield	Standard debris shield included with SRM, DSRM, T, PAS and DPAS trimmer attachments, or GT models (PRO Maxi-Cut Head is not rated for GT models)		Brushcutter shield supplied with U and C model brushcutters, blade conversion kit or PAS and DPAS brushcutter attachments		
	Handle	Standard handle included with SRM, DSRM, T, PAS and DPAS or GT models (PRO Maxi-Cut Head is not rated for GT models)		U-Handle[1] or support handle with barrier bar supplied with U and C model brushcutters, blade conversion kit or PAS and DPAS brushcutter attachments		
	Harness	Not required[2]		Harness[3] supplied with U and C model brushcutters and blade conversion kit		
	Upper/ lower plate adapter and washer	Not required	Washer required, included with cutting attachment	Upper/lower blade plate adapter included with U and C model brushcutters, blade conversion kit or PAS and DPAS brushcutter attachments		
You must install these parts	Hex nut	Not required	Hex nut required, included with cutting attachment	Hex nut required, included with U and C model brushcutters, blade conversion kit or PAS and DPAS brushcutter attachments		
	Cotter pin	Not required	New cotter pin included with cutting attachment	New cotter pin included with U and C model brushcutters, blade conversion kit or PAS and DPAS brushcutter attachments		

[1] ANSI standards require brushcutters be equipped with a support handle with barrier bar or restrictive harness.

[2] Grass trimmers do not require a harness if dry weight is below 6.0 kg (13.2 lb). For grass trimmers having a dry weight of 6.0 kg (13.2 lb) to 7.5 kg (16.5 lb), a single-shoulder harness is required. A harness may be used as outlined in this Operator's Manual.

[3] Brushcutters require a single shoulder harness, at a minimum, if the dry weight is below 7.5 kg (16.5 lb).

© 11/25 ECHO Incorporated

WARNING

Do not install blades on GT (curved shaft) model trimmers.

- **Use only ECHO approved parts. Failure to use the correct parts can cause the blade to fly off. Serious injury to the operator and/or bystanders can occur.**
- **Arbor diameter of upper blade plate must match arbor diameter of blades.**
- **For barrier bar or U-handle, follow instructions supplied with either blade conversion kit or U-handle kit, and verify blade is secured properly.**
- **A new cotter pin is required each time a blade is installed.**
- **Shoulder harnesses may be used on all trimmers and brushcutters to reduce operator fatigue. Brushcutters over 7.5 kg (16.5 lb.) and U-handle brushcutters require a double shoulder harness.**

Note: The barrier bar is used to restrict rearward movement of the unit. The barrier bar is not a handle and should not be gripped when using or carrying the unit.

Blade Selection

WARNING

An improper or dull blade can cause serious personal injury. The type of blade used must be matched to the type and size of material cut. Blades must be sharp. Dull blades increase the chance of kick-out and injury to yourself and bystanders. Never use an edging blade, circular saw blade, or any other type of unapproved blade.

NOTICE

Not all blades are compatible with all trimmers. Visit https://www.echo-usa.com or https://www.shindaiwa-usa.com to find compatible blades.

3-Tooth Grass/Weed Blade may be used wherever the nylon line head is used. DO NOT use this blade for heavy weeds or brush.

8-Tooth Weed/Grass Blade is designed for grass, garden debris and thick weeds up to 19 mm (0.75 in.) diameter. Do not use this blade for brush or heavy woody growth.

© 11/25 ECHO Incorporated

80-Tooth Brush Blade is designed for cutting brush and woody growth up to 13 mm (0.5 in.) diameter.

22-Tooth Clearing Blade is designed for dense thickets and saplings up to 64 mm (2.5 in.) diameter.

⚠ WARNING

A trimmer/brushcutter with a metal blade can cause serious injuries if handled improperly.

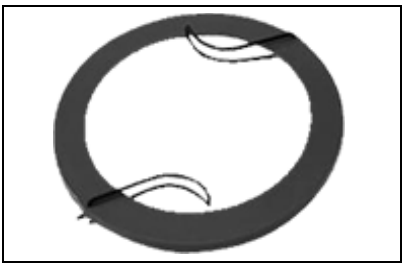

Use care when carrying or handling the equipment to avoid contact with the cutting edges of the blade. Use the optional blade cover when unit is not in use.

Keep blades in protective packaging until ready to install. Store blades safely after removal to prevent injury from accidental contact.

Use blade protectors to protect blade teeth during unit transportation.

Use Shoulder/Waist Harness

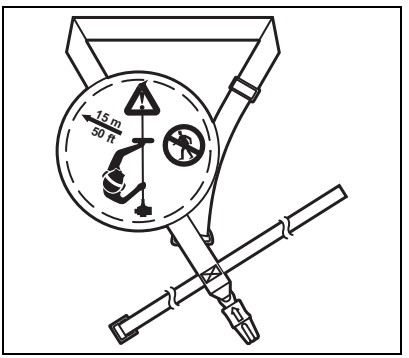

ECHO recommends using a shoulder/waist harness for all trimmer / brushcutter use, not just blade operation. The harness suspends the trimmer from the operator’s shoulder and reduces operator fatigue.

The harness also increases operator safety by reducing the possibility of blade contact with the operator's hands and feet by restricting trimmer movement.

Ensure the warning sign on the back of the shoulder harness can be read easily.

Note: In case of emergency, disconnect the trimmer from the harness.

© 11/25 ECHO Incorporated

Fuel

WARNING

Diesel fuels and alternative fuels, such as E15 (15% ethanol), E85 (85% ethanol) or any fuels not meeting ECHO requirements are not approved for use in ECHO two-stroke or hybrid four-stroke gasoline engines. Use of diesel or alternative fuels may cause performance problems, loss of power, overheating, fuel vapor lock, and unintended machine operation, including, but not limited to, improper clutch engagement. Diesel or alternative fuels may also cause premature deterioration of fuel lines, gaskets, carburetors and other engine components.

Fuel Requirements

Gasoline - Use fresh (purchased within the last 30 days from the pump) 89 Octane [R+M/2] (mid grade or higher) gasoline known to be good quality. Gasoline may contain up to 10% Ethanol (grain alcohol) or 15% MTBE (methyl tertiary-butyl ether). Gasoline containing methanol (wood alcohol) is not approved. Use of ECHO branded fuel is recommended to extend engine life in all air-cooled two-stroke and two or four-stroke hybrid engines.

Two-Stroke Oil - A two-stroke engine oil, such as ECHO branded two-stroke oils, meeting ISO-L-EGD (ISO/CD 13738) and J.A.S.O. FD Standards must be used. ECHO branded two-stroke oils meet these standards. Engine problems due to inadequate lubrication caused by failure to use an ISO-L-EGD (ISO/CD 13738) and J.A.S.O. M345-FD certified oil will void the two-stroke engine warranty.

WARNING

Two-stroke engine oil contains petroleum distillates and other additives that may be harmful if swallowed. Heated oil can release vapors that can cause flash fire, or ignite with explosive force. Read and follow the oil manufacturer's instructions, and observe all safety warnings and precautions for handling flammable liquids. For more detailed safety and first aid information, visit https://www.echo-usa.com for a copy of the Material Safety Data Sheet.

- **Keep out of reach of children.**
- **If swallowed, do not induce vomiting. Call physician or a poison control center immediately.**
- **Wear safety glasses when mixing or handling.**

© 11/25 ECHO Incorporated

- **Avoid repeated or prolonged skin contact.**
- **Avoid inhaling oil mists or vapors.**

NOTICE

ECHO branded two-stroke oils may be mixed at 50:1 ratio for application in all ECHO engines sold in the past, regardless of ratio specified in those manuals.

Handling Fuel

DANGER

Fuel is flammable. Use extreme care when mixing, storing or handling, or serious personal injury may result.

- ***Use an approved fuel container.***
- ***Do not smoke near fuel.***
- ***Do not allow flames or sparks near fuel.***
- ***Fuel tanks/cans may be under pressure. Always loosen fuel caps slowly allowing pressure to equalize.***
- ***Never refuel a unit when the engine is hot or running.***
- ***Do not fill fuel tanks indoors. Always fill fuel tanks outdoors over bare ground.***
- ***Do not overfill fuel tank. Wipe up spills immediately.***
- ***Securely tighten fuel tank cap and close fuel container after refueling.***
- ***Inspect for fuel leakage. If fuel leakage is found, do not start or operate unit until leakage is repaired.***
- ***Use caution when handling fuel. Mix and pour fuel outdoors where there are no sparks and flames. Slowly remove the fuel cap only after stopping the engine and allowing the unit to cool. Do not smoke while fueling or mixing fuel. Move the unit at least 3 m (10 ft.) from the fueling point before starting the engine.***

DANGER

Gasoline vapor is heavier than air, and can travel along the ground to nearby sources of ignition such as electrical motors, pilot lights, and hot or running engines. Vapors ignited by an ignition source can flash back to the fuel container, resulting in an explosion, fire, serious or fatal injuries, and extensive property damage.

© 11/25 ECHO Incorporated

Mixing Instructions

1. Fill an approved fuel container with half of the required amount of gasoline.
2. Add the proper amount of engine oil to gasoline.
3. Close container and shake to mix oil with gasoline.
4. Add remaining gasoline, close fuel container, and remix.

FUEL TO OIL MIX – 50:1 RATIO			
US		Metric	
Gas	Oil	Gas	Oil
gal.	fl. oz.	L	cc
1	2.6	5	100
2	5.2	10	200
5	13	25	500

NOTICE

Spilled fuel is a leading cause of hydrocarbon emissions. Some states may require the use of automatic fuel shut-off containers to reduce fuel spillage.

After use - Empty the fuel tank prior to storing the unit. Return unused fuel to an approved fuel storage container.

Storage - Fuel storage laws vary by locality. Contact your local government for the laws affecting your area. As a precaution, store fuel in an approved, airtight container. Store in a well-ventilated, unoccupied building, away from sparks and flames.

NOTICE

Stored fuel ages. Do not mix more fuel than you expect to use in thirty days or ninety days when a fuel stabilizer is added.

NOTICE

Stored two-stroke fuel may separate. Always shake fuel container thoroughly before each use.

NOTICE

Used oil and gasoline, and soiled towels are hazardous waste materials. Disposal laws vary by locality.

© 11/25 ECHO Incorporated

Starting Cold Engine

WARNING

The attachment will operate immediately when the engine starts, and could result in possible serious injury. Keep movable parts of the attachment away from objects that could become entangled or thrown, and surfaces that could cause loss of control.

NOTICE

If a protective blade cover is used, ALWAYS remove blade cover before starting equipment.

1. Move stop switch (A) forward, away from the STOP position.

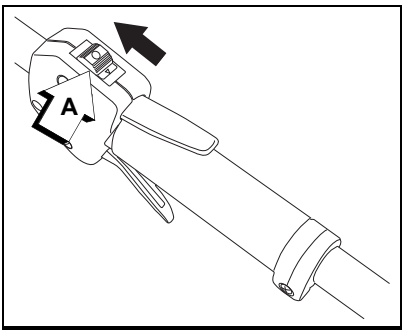

2. Move choke lever (B) to COLD START position.
3. Pump purge bulb (C) until fuel is visible and flows freely in the clear fuel tank return line. Pump bulb an additional five times.
4. Press decompression device (D).

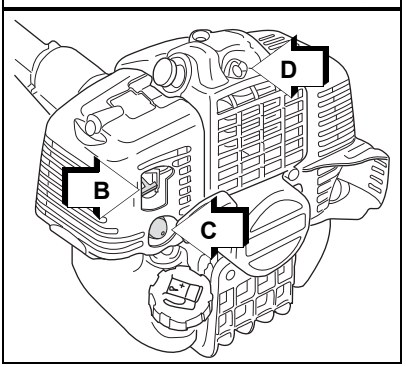

© 11/25 ECHO Incorporated

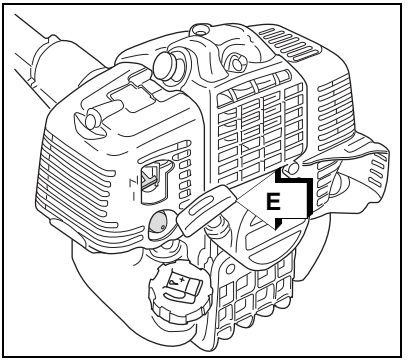

5. Lay the unit on a flat area and keep movable attachment parts clear of all obstacles.
6. Firmly grasp throttle handle and throttle trigger lockout with left hand and fully depress throttle trigger to wide open position.
7. Rapidly pull recoil starter handle/rope (E) until engine fires (or three pulls).
8. After engine fires (or three pulls), move choke to the RUN (open) position.
9. Firmly grasp throttle handle and throttle trigger lockout with left hand and fully depress throttle trigger to wide open position.
10. Pull starter handle/rope (E) until engine starts and runs. Release throttle trigger and allow unit to warm up at idle for several minutes.
11. After engine warm-up, grip throttle handle and support handle. Depress the throttle trigger lockout, and gradually depress throttle trigger to increase engine RPM to operating speed.

Note: If engine does not start with choke in “RUN” position after three pulls, repeat steps 2 - 6.

© 11/25 ECHO Incorporated

Starting Warm Engine

The starting procedure is the same as Cold Start except DO NOT close the choke, and do not hold throttle trigger fully depressed.

WARNING

The attachment should not move at idle, otherwise serious personal injury may result.

Note: If attachment moves, readjust carburetor according to “Carburetor Adjustment” instructions in this manual or see your dealer.

1. Press decompression device.
2. Move stop switch button (A) forward away from the STOP position.

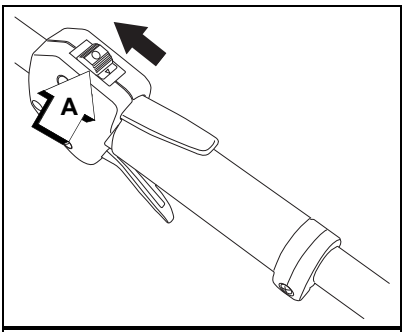

3. Pump purge bulb (C) until fuel is visible in the “Clear” fuel return line. Pump bulb an additional five times.

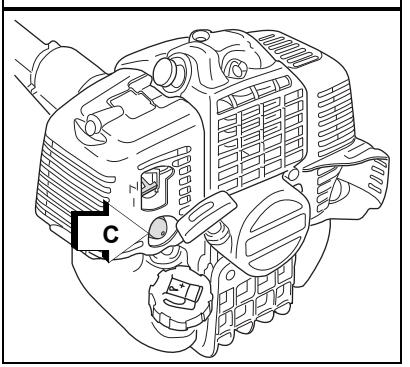

© 11/25 ECHO Incorporated

4. Lay the unit on a flat area and keep movable attachment parts clear of all obstacles.
5. Firmly grip throttle handle and throttle trigger lockout with left hand.
6. Rapidly pull recoil starter handle/rope (E) until engine fires.

Note: If engine does not start after three pulls, use cold start procedure.

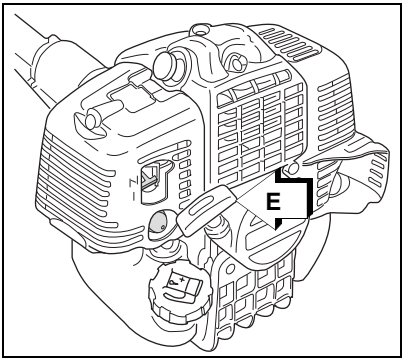

Stopping Engine

1. Release throttle trigger and allow engine to return to idle before shutting off engine.
2. Move stop switch button (A) backward to STOP position.

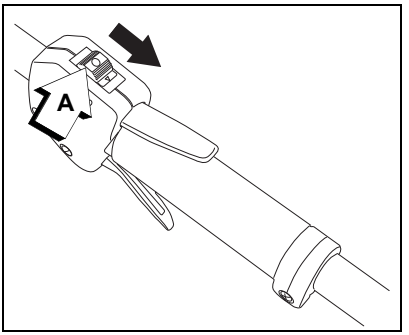

WARNING

If engine does not stop when stop switch is moved to STOP position, close choke - COLD START position - to stall engine. Have your dealer repair stop switch before using unit again.

© 11/25 ECHO Incorporated

Applications

WARNING

Incorrect unit positioning can cause loss of control and serious personal injury. Always hold throttle handle with right hand and support handle with left hand, positioning unit on right side of body.

WARNING

Do not install blades on GT (Curved Shaft) or T model trimmers.

Operating Techniques - Nylon Line Head

Nylon line heads may be used for trimming, scything, edging, and scalping of grass and light weeds.

Models with Speed-Feed® line heads: To advance trimmer line, tap trimmer head against the ground while the head is turning at normal operating speed.

Trimming

Feed the spinning line into the material to be cut. Tilt the line head to one side to direct cutting debris away from you:

- **Model SRM/PAS/SB/TX/C/T (Straight shaft, counterclockwise line head rotation):** Tilt the cutting head down on the right side (muffler side) while cutting to direct cutting debris away from operator. Feed the line gradually into the material you wish to cut, avoiding contact with fences or other barriers.
- **GT models:** Tilt cutting head to the left while cutting to direct debris away from the operator.

Scything

Scything - Swing the cutting head in a level arc, gradually feeding the line into the material being cut. Move forward with each arc to cut a swath. Width of cutting swath depends on arc. Use a larger arc for a wider swath, or a smaller arc for a narrow swath. Keep line head tilted to direct cutting debris forward or away from you.

© 11/25 ECHO Incorporated

Edging and Scalping

Both of these are done with the nylon line cutting head tilted at a steep angle. Scalping is removing top growth, leaving the earth bare. Edging is trimming the grass back where it has spread over a pavement or driveway. During both edging and scalping, hold the unit at a steep angle in a position where the debris, and any dislodged dirt and stone, will not come back towards you even if it ricochets off the hard surface.

General

- Debris flows in direction of line head rotation. Change line head position to ensure debris flow is directed away from operator.
- Keep cutting line away from wire fences to avoid entanglement.
- Operate trimmer only with cutting head below knee height.

Operating Techniques - Metal or Plastic Blade

Brushcutter blades may be used to cut and trim a wide variety of materials, refer to the blade selection section for determining the correct blade for the application.

Scything (3-, 8-, and 80-tooth weed/grass, and brush blades)

- To cut large sections of field grass and weeds swing the cutting head in a level arc, gradually feeding the blade into the material being cut. Adjust throttle speed according to the work.
- Do not swing the main pipe with arms. Turn hips to swing the blade horizontally from right to left, and cut weeds on the left side of the blade.
- Do not scythe back and forth as the grass may scatter and kickback may occur easily.
- Tilt blade left by 5 to 10 degrees so that cut grasses will push left, making progress easier.
- Move forward with each arc to cut a swath.
- Width of cutting swath depends on arc. Use a larger arc for a wider swath, or a smaller arc for a narrow swath. Suggested cutting width is about 1.5 m (4.9 ft).
- When scything large brush up to 12.7 mm (0.5 in.) diameter from right to left, avoid cutting with highlighted section.

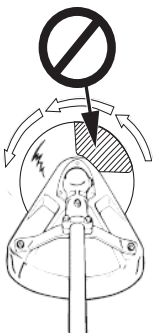

© 11/25 ECHO Incorporated

Reaction Forces

⚠ WARNING

- **The cutting attachment will continue to rotate even after the throttle is released, maintain control of the unit until it has come to a complete stop.**
- **Blade thrust may occur when the spinning blade contacts an object that it does not immediately cut. Following proper cutting techniques will prevent blade thrust.**
- **Blade thrust can be violent enough to cause the unit and/or operator to be propelled in any direction, and possibly lose control of the unit.**
- **Blade thrust can occur without warning if the blade snags, stalls or binds.**
- **Blade thrust is more likely to occur in areas where it is difficult to see the material being cut.**

Push or Pull - Kickout

During normal use, operating a brushcutter with a circular metal blade can produce sudden strong reaction forces that are difficult to control. Strong reaction forces can cause a loss of balance or loss of control of the equipment, resulting in serious injury to operator and bystanders.

Understanding what causes these reactive forces may help you to avoid them, and can help you to maintain control of the equipment if you experience a sudden reaction during cutting. Reactive forces occur when the force being applied by the cutting teeth of a blade meet resistance, and some of the cutting force is directed back toward the equipment. The greater the cutting force or the amount of resistance, the greater the reactive force.

© 11/25 ECHO Incorporated

Push and Pull Forces

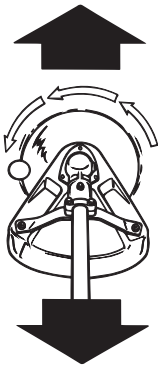

Push and pull forces are reactive forces that push the equipment directly toward the operator, or that pull the equipment directly away from the operator. These forces are the result of cutting on the sides of the blade. The direction of the force depends on the side of the blade being used, and the direction of blade rotation at the point of contact. The reactive force is in the opposite direction of blade rotation at the contact point, regardless of where the contact is being made. These types of reactive forces are also called “blade thrust.” As shown in the illustration, a blade turning counterclockwise will cause the equipment to pull away from the operator if the point of cutting resistance is on the left side of the blade. If the point of cutting resistance is on the right side of the blade, the equipment will push back toward the operator. In both examples, the reactive force is in the opposite direction of blade rotation at the contact point where resistance occurs.

Kickout

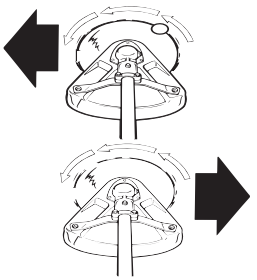

Kickout is also a reactive force caused by resistance to cutting, but the direction of blade thrust is lateral (to the left or right of the blade), instead of forward or back toward the operator. In most cases, push, pull, and kickout can be reduced or eliminated by:

- Using the correct blade for the cutting job.
- Using properly sharpened blades.
- Applying consistent, even force to the blade during the cut.
- Avoiding obstacles and ground hazards.
- Using extra care when cutting harder materials such as extremely dry brush, saplings, and small trees.
- Cutting from a stable, secure position.

© 11/25 ECHO Incorporated

Blade Cutting Problems

Binding - Blades may bind in the cut if dull or forced. Binding can damage blade, and result in blade breakage or injury from fragments and flying debris. If a blade binds in a cut, do not try to get it out by applying up and down force to pry the cut open. Applying prying force to the blade can bend the blade, and result in blade failure and injury.

To free a blade that is bound in the cut, stop the engine, and support the trimmer or brushcutter to keep stress off the blade. Push the tree away from the entry point of the cut to open the cut, and pull the blade directly away from the cut in a straight-line motion. Use caution when releasing the tree to avoid being struck by spring-back or falling.

Inspect the blade for damage before proceeding. Sharpen teeth if dull, or replace blade if cracked, bent, missing teeth, or otherwise damaged.

To prevent binding:

- Keep blades sharp.
- Avoid excessive pressure during cuts.
- Do not exceed cutting capacity of blade.
- Do not use blades with damaged or missing cutting teeth.
- Do not tilt blade when cutting.

© 11/25 ECHO Incorporated

MAINTENANCE

WARNING

Moving parts can amputate fingers or cause severe injuries. Keep hands, clothing and loose objects away from all openings. Always stop unit, disconnect spark plug or remove battery, and make sure all moving parts have come to a complete stop before removing obstructions, clearing debris, or servicing unit. Allow the unit to cool before performing maintenance or adjustments. Wear gloves to protect hands from sharp edges and hot surfaces.

WARNING

Operating a poorly maintained unit can result in serious injuries to operator or bystanders. Always follow all maintenance instructions as written, otherwise serious personal injury can result.

Your unit is designed to provide of trouble-free service. Perform regular scheduled maintenance. If you are unsure about the task, or are not equipped with the necessary tools, we recommend that you take your unit to an Authorized Service Dealer for maintenance. To help you decide whether you want to do it yourself or have the Authorized Service Dealer do it, each maintenance task has been graded. If a task is not listed, see your Authorized Service Dealer for repairs.

NOTICE

The use of emission control components other than those specifically designed for this unit is a violation of federal law.

Skill Levels

Level 1 = Easy to do. Common tools may be required.

Level 2 = Moderate difficulty. Some specialized tools may be required.

Level 3 = See your Authorized Service Dealer.

Click HERE or go to https://www.echo-usa.com/products/maintenance-kit

or

https://www.shindaiwa-usa.com/you-can.aspx

© 11/25 ECHO Incorporated

Maintenance Intervals

COMPONENT / SYSTEM	MAINTENANCE PROCEDURE	SKILL LEVEL
Daily or Before Use		
Air filter	Inspect / Clean [1]	**1**
Choke shutter		
Fuel system	Inspect [2]	
Cooling system	Inspect / Clean	**2**
Recoil starter rope	Inspect / Clean [1]	**1**
Screws / nuts / bolts	Inspect / Tighten / Replace [1]	
Blade	Inspect / Replace [1]	**1**
Every Refuel		
Fuel system	Inspect [2]	**1**
3 Months		
Air filter	Replace [1]	**1**
Fuel filter	Inspect [1]	
Fuel cap gasket		
Spark plug	Inspect / Clean / Replace [1]	
Muffler spark arrester		**2**
Cylinder exhaust port	Inspect / Clean / Remove carbon deposits	
Drive shaft (flex cable models)	Grease [3]	
Gear housing (certain models)	Grease [4]	
Yearly		
Fuel filter	Inspect / Replace [1]	**1**
Fuel cap gasket	Replace [1]	

Note: Time intervals shown are maximum. Actual use and your experience will determine the frequency of required maintenance.

© 11/25 ECHO Incorporated

[1] Replacement is recommended based on the finding of damage or wear during inspection.

[2] Low evaporative fuel tanks do not require regular maintenance to maintain emission integrity.

[3] Apply lithium-based grease every 25 hours of use.

[4] Apply lithium-based grease every 50 hours of use.

Air Filter

Level 1

Parts required: Tune-Up Kit.

1. Move stop switch to STOP position.
2. Allow unit to cool (if required).
3. Remove spark plug lead from spark plug.
4. Close choke (COLD START position). This prevents dirt from entering the carburetor throat when the air filter is removed. Brush accumulated dirt from air cleaner area.
5. Remove air filter cover (A). Brush dirt from inside cover.
6. Remove air filter (B) from case. Use care to prevent dirt and debris from falling into case.
7. Inspect filter element and seal. Replace filter if any of these problems are present:
   - Air filter seal does not fit tightly against case
   - Air filter seal is distorted, worn, or damaged
   - Air filter element has holes or other damage
   - Air filter element is saturated with dirt
   - Air filter element is soaked with fuel mix
8. If air filter is in good condition and can be cleaned and reused, lightly brush debris from air filter element, or blow filter element clean using low pressure (40 psi or less) compressed air directed at inside of filter.

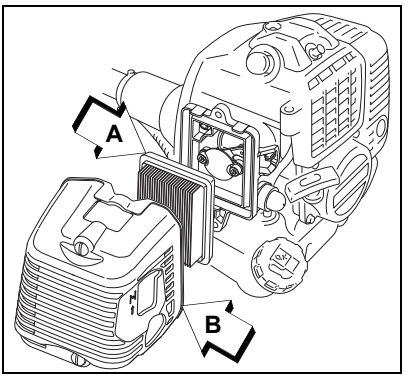

© 11/25 ECHO Incorporated

NOTICE

When using compressed air, always direct air stream at inside surface of filter so dust and debris will be blown out of filter. Keep air nozzle 152-203 mm (6-8 in.) away from filter to prevent damage to filter.

9. Install air filter in case, and replace cover.

Fuel Filter

Level 1.

Parts required: Tune-Up Kit.

DANGER

Fuel is VERY flammable. Use extreme care when mixing, storing or handling, or serious personal injury may result.

1. Move stop switch to STOP position.
2. Allow unit to cool (if required).
3. Remove spark plug lead from spark plug.
4. Use a clean rag to remove loose dirt from around fuel cap and empty fuel tank.
5. Pull fuel filter out through gas port, and inspect fuel filter.
6. Remove the filter from the line and install the new filter.

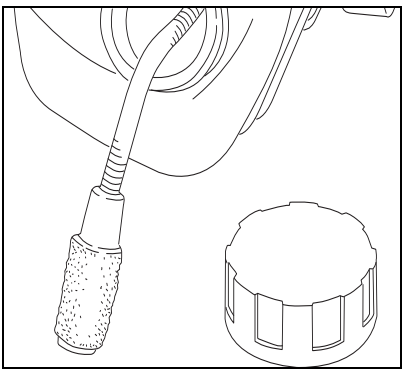

Note: Federal EPA regulations require all model year 2012 and later gasoline powered engines produced for sale in the United States to be equipped with a special low permeation fuel supply hose between the carburetor and fuel tank. When servicing model year 2012 and later equipment, only fuel supply hoses certified by EPA can be used to replace the original equipment supply hose. Fines up to $37,500 may be enforced for using an un-certified replacement part.

© 11/25 ECHO Incorporated

Spark Plug

Level 2.

Parts required: Tune-Up Kit.

NOTICE

Use only NGK BPM7A spark plug (BPMR7A in Canada) otherwise severe engine damage may occur.

1. Move stop switch to STOP position.
2. Allow unit to cool (if required).
3. Remove spark plug lead from spark plug.
4. Remove spark plug and check for fouling, worn and rounded center electrode.
5. Clean the plug or replace with a new one. DO NOT sand blast to clean. Remaining sand will damage engine.
6. Adjust spark plug gap by bending outer electrode.

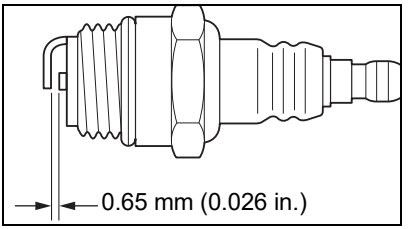

7. Tighten spark plug to 150-170 kgf•cm (130 - 150 lbf•in).

© 11/25 ECHO Incorporated

Cooling System

Level 2.

NOTICE

To maintain proper engine operating temperatures, cooling air must pass freely through the cylinder fin area. This flow of air carries combustion heat away from the engine.

Overheating and engine seizure can occur when:

- Air intakes are blocked, preventing cooling air from reaching the cylinder.
- Dust and grass build up on the outside of the cylinder. This build up insulates the engine and prevents the heat from leaving.

Removal of cooling passage blockages or cleaning of cooling fins is considered “Normal Maintenance.” Any failure attributed to lack of maintenance is not warranted.

1. Move stop switch to STOP position.
2. Allow unit to cool (if required).
3. Remove spark plug lead from spark plug.
4. Remove muffler cover (A).
5. Remove engine cover (B).

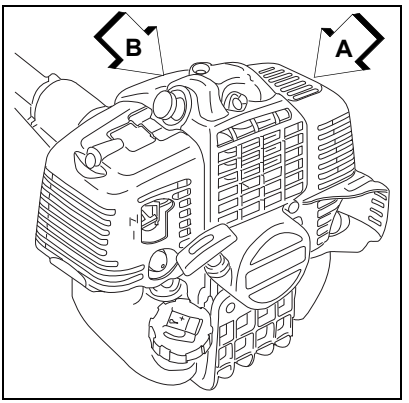

NOTICE

DO NOT use a metal scraper to remove dirt from the cylinder fins.

6. Use brush to remove dirt from the cylinder fins.
7. Remove grass and leaves from the grid between the recoil starter and fuel tank.
8. Assemble components in reverse order.

© 11/25 ECHO Incorporated

Exhaust System

Spark Arrester Screen

Level 2.

Parts required: Spark Arrester Screen, Gasket.

1. Move stop switch to STOP position.
2. Allow unit to cool (if required).
3. Remove spark plug lead from spark plug.
4. Remove muffler cover.
5. Place piston at Top Dead Center (TDC) to prevent carbon or dirt from entering cylinder.

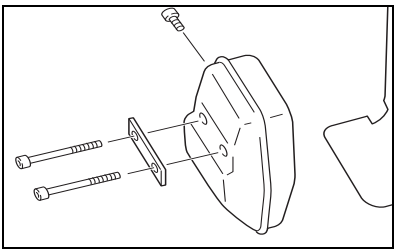

6. Remove spark arrester screen cover (B), screen holder (C), gasket (D), and screen (E), from muffler body.
7. Clean carbon deposits from muffler components.

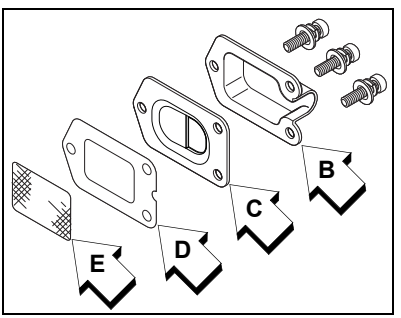

Note: When cleaning carbon deposit, be careful not to damage the catalytic element inside muffler.

8. Replace screen if it is cracked, plugged, or has holes burned through.
9. Assemble components in reverse order.

© 11/25 ECHO Incorporated

Exhaust Port Cleaning

Level 2.

Parts required: Heat Shield (as needed).

NOTICE

Never use a metal tool to scrape carbon from the exhaust port. Do not scratch the cylinder or piston when cleaning the exhaust port. Do not allow carbon particles to enter the cylinder.

1. Move stop switch to STOP position.
2. Allow unit to cool (if required).
3. Remove spark plug lead from spark plug.
4. Remove muffler cover.
5. Place piston at top dead center. Remove muffler (A) and heat shield (B).

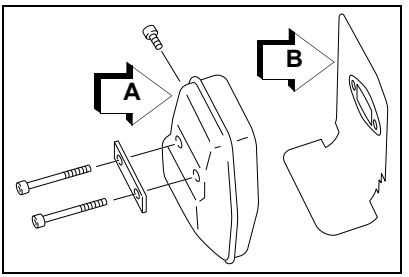

6. Use a wood or plastic scraping tool to clean deposits from cylinder exhaust port (C).
7. Inspect heat shield, and replace if damaged.
8. Install heat shield and muffler.
9. Tighten muffler mounting bolts (or nuts) to 110-150 kgf•cm (95-130 lbf•in).

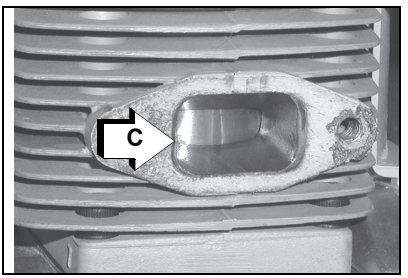

10. Install muffler cover and attach spark plug lead.
11. Start engine, and warm to operating temperature.
12. Stop engine, and re-tighten mounting bolts (or nuts) to specifications.

© 11/25 ECHO Incorporated

Carburetor Adjustment

Level 2.

WARNING

When carburetor adjustment is completed, the cutting attachment should not move at idle, otherwise serious personal injury may result.

Engine Break-In

New engines must be operated a minimum duration of two tanks of fuel break-in before carburetor adjustments can be made. During the break-in period your engine performance will increase and exhaust emissions will stabilize. Idle speed can be adjusted as required.

High Altitude Operation

This engine has been factory adjusted to maintain satisfactory starting, and durability performance up to 335 m (1,100 ft.) above sea level (ASL) (96.0 kPa). To maintain proper engine operation above 335 m (1,100 ft.) ASL the carburetor may need to be adjusted by an authorized service dealer.

NOTICE

If the engine is adjusted for operation above 335 m (1,100 ft.) ASL, the carburetor must be re-adjusted when operating the engine below 335 m (1,100 ft.) ASL, otherwise severe engine damage may result.

Note: Every unit is run at the factory and the carburetor is set in compliance with emission regulations. Carburetor adjustments, other than idle speed, must be performed by an authorized dealer.

1. Check idle speed and reset if necessary. If a tachometer is available, idle speed screw (A) should be set to the specifications found on “Specifications” page of this manual. Turn idle screw (A) clockwise to increase idle speed; counterclockwise to decrease idle speed.

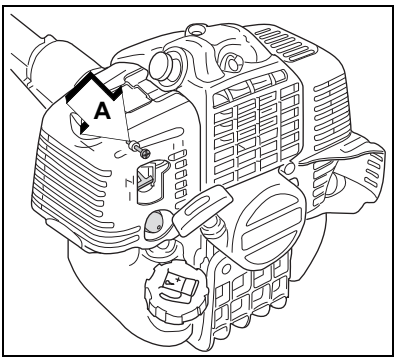

© 11/25 ECHO Incorporated

Lubrication

Level 1.

Parts required: Lithium-based grease.

Gear Case

Note: Gear cases without a grease plug do not require lubrication.

1. Clean all loose debris from gear case.
2. Remove grease plug (A), if equipped, and check level of grease.
3. Add grease if necessary. Fill to bottom of grease plug hole.
4. Install grease plug (A).

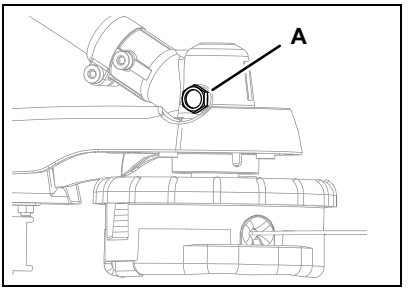

Drive Shaft (Flex Cable Only)

1. Loosen screw (B) and remove locating screw (C). Pull gear case and shield from drive shaft housing.

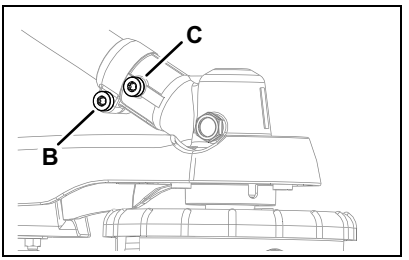

2. Pull flexible cable (D) from the drive shaft housing, wipe clean and coat with 15 ml (0.5 oz.) of grease.
3. Slide the flexible cable (D) back in the drive housing. Do not get dirt on the flex cable.
4. Assemble driveshaft to gear housing and shield assembly.

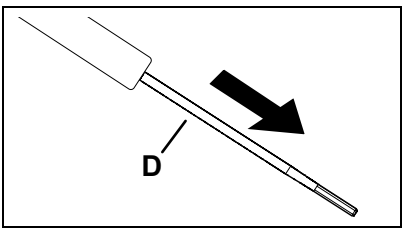

© 11/25 ECHO Incorporated

Nylon Line Head Disassembly Instructions

Note: For normal use, Speed-Feed® head disassembly is not necessary. However, if circumstances require disassembly, follow these instructions:

1. Press top of locking tabs (A) on both sides of Speed-Feed® head to release cover (B) from knob (C).
2. Remove cover (B) from knob (C).

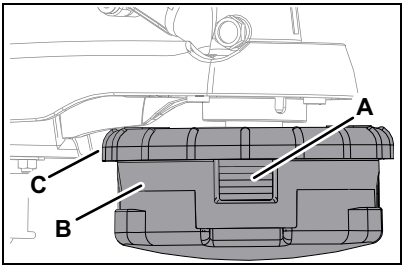

Nylon Line Replacement

⚠ CAUTION

Wear gloves or personal injury may result.

- ***Cut-off knife is sharp.***
- ***Gear case and surrounding area may be hot.***

1. Cut one piece of line to recommended length:
   - 2.0 mm (0.080 in.) diameter, 7.6 m (25 ft.)
   - 2.4 mm (0.095 in.) diameter, 7.6 m (25 ft.)
2. Align arrows on top of knob with openings in eyelets.

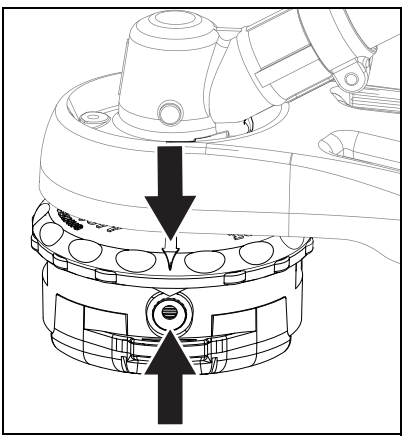

© 11/25 ECHO Incorporated

3. Insert one end of trimmer line into an eyelet, and push line equal distance through trimmer head.

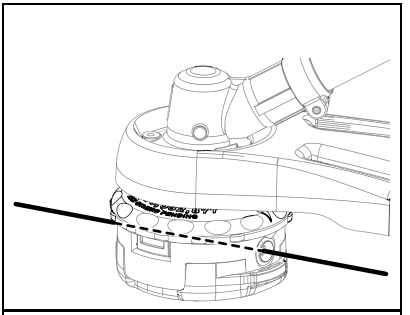

4. Hold trimmer head while turning knob clockwise to wind line onto spool until about 13 cm (5 in.) of each line remains exposed.

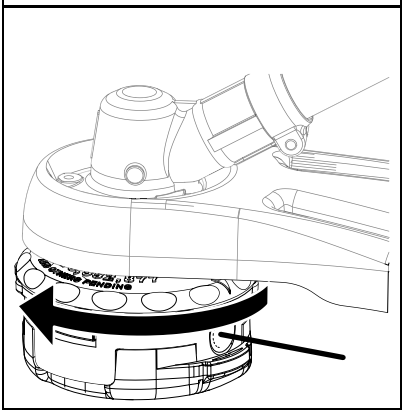

NOTICE

When the wear indicators located at the bottom of the Speed-Feed® head are worn smooth, or if holes appear, replacement of the cover or the entire Speed-Feed® head is required.

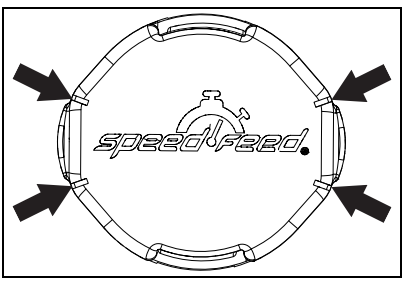

© 11/25 ECHO Incorporated

Sharpening Metal Blades

WARNING

Metal blades are very sharp and can cause severe injuries, even if unit is off and blades are not moving. Avoid contact with blades. Wear gloves to protect hands.

Several styles of metal blades are approved for use on the brushcutter. The 8-tooth blade can be sharpened during normal maintenance. The clearing blade and 80-tooth blade require professional service.

Before sharpening, closely inspect blade for cracks (look at the bottom of each tooth and the center mounting hole closely), missing teeth and bending. If any of these problems are discovered, replace the blade.

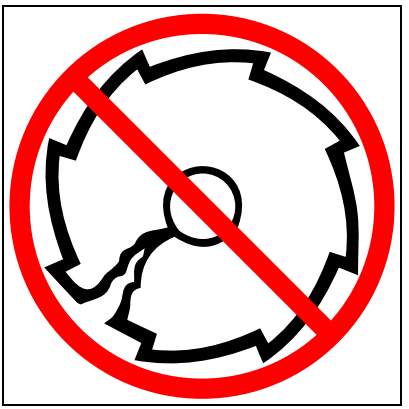

When sharpening a blade, always remove the same amount of materials from each tooth to maintain balance. A blade that is not balanced will cause unsafe handling due to vibration and can result in blade failure.

NOTICE

If an electric grinder is used, use care not to overheat teeth, do not allow tips/tooth to glow red or turn blue. Do not place blade in cooling water. This will change the temper of the blade and could result in blade failure.

1. File each tooth at a 30 degree angle a specific number of times, e.g., four strokes per tooth. Work your way around the blade until all teeth are sharp.

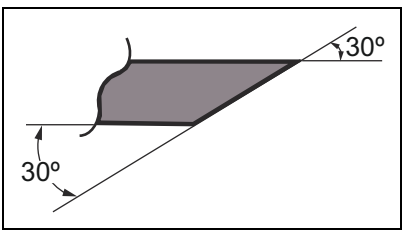

© 11/25 ECHO Incorporated

2. Do not file the gullet (radius) (A) of the tooth with the flat file. The radius must remain. A sharp corner will lead to a crack and blade failure.
3. After sharpening teeth, check each tooth radius for evidence of a square (sharp) corner. Use the round (rat tail) file to renew the radius.

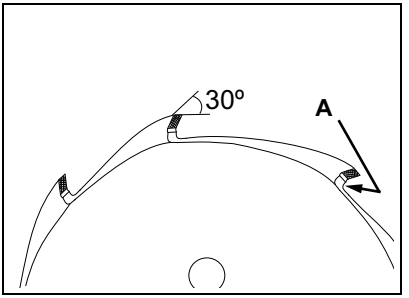

© 11/25 ECHO Incorporated

TROUBLESHOOTING

DANGER

Fuel vapors are flammable and can cause fire and/or explosion. Never test for ignition spark by grounding spark plug near cylinder plug hole, otherwise serious personal injury can result.

ENGINE PROBLEM TROUBLESHOOTING CHART				
Problem	**Check**	**Status**	**Cause**	**Remedy**
Engine starts hard. or Engine does not start.	Fuel at carbure-tor.	No fuel at carburetor.	Fuel filter or fuel line obstructed.	Clean or replace. See your Authorized Service Dealer.
	Fuel at cylinder.	No fuel at cylinder.	Carburetor	See your Autho-rized Service Dealer.
		Muffler wet with fuel.	Fuel mixture too rich.	Open choke. Clean or replace air filter. Adjust carburetor. See your Authorized Service Dealer.
	Spark at end of plug wire.	No spark.	Stop switch OFF. Electrical problem. Interlock switch.	Turn switch to ON. See your Authorized Service Dealer.
	Spark at plug.		Incorrect gap. Covered with carbon. Fouled with fuel. Spark plug defective.	Adjust to 0.65 mm (0.026 in.). Clean or replace spark plug.

© 11/25 ECHO Incorporated

ENGINE PROBLEM TROUBLESHOOTING CHART				
Problem	**Check**	**Status**	**Cause**	**Remedy**
Engine runs, but dies. or Engine does not acceler-ate properly.	Air filter	Air filter dirty.	Normal wear.	Clean or replace.
	Fuel filter	Fuel filter dirty.	Contaminants or residue in fuel.	Replace filter or replace fuel.
	Fuel vent	Fuel vent plugged.	Contaminated fuel.	Clean or replace.
	Spark plug	Plug dirty or worn.	Normal wear.	Clean and adjust or replace.
	Carbure-tor	Improper adjust-ment.	Vibration	Adjust
	Cooling system	Cooling system dirty or plugged.	Extended oper-ation in dirty or dusty locations.	Clean
	Spark arrester screen	Spark arrester screen plugged.	Normal wear.	Replace
Engine does not crank.	N/A		Internal engine problem.	See your Autho-rized Service Dealer.

© 11/25 ECHO Incorporated

STORAGE

Transportation

- Shut engine off before transporting.
- Secure unit to prevent fuel spillage and damage.

Short-Term Storage

- Shut engine off.
- Store unit in a dry, dust-free place, out of the reach of children.

Long-Term Storage (Over 30 Days)

DANGER

Explosion hazard. Fuel fumes can accumulate and explode if exposed to an open flame or spark. Store in a well ventilated area.

Do not store your unit for a prolonged period of time (30 days or longer) without performing protective storage maintenance.

1. Move stop switch to STOP position.
2. Allow engine to cool.
3. Clean exterior of unit.
4. Perform required maintenance.
5. Tighten all fasteners.

DANGER

Fire hazard. Fuel is flammable. Burning fuel will cause bodily injury or death. Wear protective equipment. Use care when mixing, storing or handling.

WARNING

Burn hazard. During operation the muffler or catalytic muffler and surrounding cover become hot. Always keep exhaust area clear of flammable debris during transportation or when storing, otherwise serious property damage or personal injury may result.

© 11/25 ECHO Incorporated

6. Drain fuel tank completely.
7. Press purge bulb six to seven times to remove remaining fuel from carburetor then drain tank again.
8. Close choke, start and run the engine until it stops due to lack of fuel.
9. Allow engine to cool.
10. Remove spark plug lead from spark plug.
11. Remove spark plug from cylinder.
12. Pour 7 mL (0.25 fl. oz.) of two-stroke engine oil into cylinder through spark plug hole.
13. Pull recoil starter handle two to three times to distribute oil inside engine.
14. Observe piston location through the spark plug hole. Pull the recoil handle slowly until the piston reaches the top of its travel and leave it there.
15. Install spark plug.
16. Connect spark plug lead to spark plug.
17. Store unit in a dry, dust-free place, out of the reach of children.

Hedge Trimmers Only

WARNING

Hedge trimmer blades are sharp. Avoid touching blades whenever possible, and always wear gloves to protect hands. Touching blades could lead to severe personal injury.

NOTICE

Always store and transport hedge trimmers in a stable, horizontal position. Support gear case and cutting blades to prevent excessive flexing, which may cause damage to these components. Always install blade cover when transporting or storing unit.

1. Apply clean oil to the entire length of the blade. Be certain the blade bolts are lubricated.
2. Install blade guard on blades.

© 11/25 ECHO Incorporated

Power Pruners® Only

NOTICE

Some tree sap and resins are corrosive and can damage guide bars, saw chains and sprockets.

1. Wash the guide bar and sprocket areas after each use, then coat metal parts with oil.

© 11/25 ECHO Incorporated

SPECIFICATIONS

MODEL	SRM-410 (S/N U46212001001-U46212008560)	SRM-410 (S/N U46212008561-U46212999999)
Length (without cutter head)	1,866 mm (73.5 in.)	
Width	347 mm (13.7 in.)	
Height	367 mm (14.4 in.)	
Weight (dry) (without cutter head)	7.4 kg (16.3 lb)	7.3 kg (16.1 lb)
Engine Type	Air cooled, two-stroke, single cylinder gasoline engine	
Bore	40 mm (1.58 in.)	
Stroke	34 mm (1.34 in.)	
Displacement	42.7 cc (2.61 in.^{3})	
Exhaust	Spark arrester muffler or spark arrester muffler with catalyst	
Carburetor	Diaphragm with purge pump	
Ignition System	Flywheel magneto, capacitor discharge ignition type	
Spark Plug	NGK BPM7A (BPMR7A in Canada) Gap 0.6 mm (0.026 in.)	
Fuel	Mixed (gasoline and two-stroke oil)	
Fuel/Oil Ratio	50:1	
Gasoline	Use 89 Octane unleaded. Do not use fuel containing methyl alcohol, more than 10% ethyl alcohol or 15% MTBE. Do not use alternative fuels such as E15 or E85.	
Oil	ISO-L-EGD (ISO/CD 13738) and J.A.S.O. M345-FD, two-stroke, air-cooled engine oil.	
Fuel Tank Capacity	1.0 L (33.8 US fl. oz.)	.92 L (31.1 US fl. oz.)
Starter System	Automatic rewind starter	
Clutch	Centrifugal type	

© 11/25 ECHO Incorporated

MODEL	SRM-410 (S/N U46212001001-U46212008560)	SRM-410 (S/N U46212008561-U46212999999)
Vibration Isolated System	Rubber cushion on engine mount. Rubber anti-vibration grip on front and rear handles.	
Operating Rod	28.0 mm (1.1 in.) diameter aluminum tube	
Drive Shaft	8 mm (0.31 in.) diameter steel shaft	
Gear Case Ratio	1.33:1	
Rotating Direction	Counterclockwise (viewed from top)	
Cutter Head	Speed Feed® 450 LH nylon line head, line capacity 7.6 m (25 ft.) or Speed Feed® 500 LH nylon line head, line capacity 8.2 m (27 ft.)	
Handle	Front - D-loop type with rubber anti-vibration grip Rear - Rubber anti-vibration grip	
Shoulder Harness	Included	
Idle Speed	2,900 RPM	
Clutch Engagement Speed	3,700 RPM	
Wide Open Throttle Speed	10,200 RPM	

© 11/25 ECHO Incorporated

PRODUCT REGISTRATION

Thank you for choosing ECHO Power Equipment

Please go to http://www.echo-usa.com/Warranty/Register-Your-ECHO to register your new product on-line. It's ***FAST*** and ***EASY***! NOTE: Your information will never be sold or misused by ECHO Incorporated. Registering your purchase enables us to contact you in the unlikely event of a service update or product recall, and verifies your ownership for warranty consideration.

If you do not have access to the Internet, you can complete the form below and mail to:

ECHO Incorporated, Product Registration, PO Box 1139,
Lake Zurich, IL 60047.

© 11/25 ECHO Incorporated

PRODUCT REGISTRATION CARD : TARJETA DE REGISTRO : CARTE D'ENREGISTREMENT DU PRODUIT

ONLINE OPTION: Register online and save a stamp! You will be alerted of product updates and/or be sent new ECHO product information and special offers. Simply go to: **www.echo-usa.com**

OPCIÓN POR INTERNET: ¡Registrese en la pagina web y ahorre una estampilla! Le alertarán sobre actualizaciones del producto y/o se le enviara información sobre los nuevos productos ECHO y las ofertas especiales. Simplemente visite: **www.echo-usa.com**

OPTION EN LIGNE : Enregistrer en ligne et épargner un timbre! Vous serez informé sur les nouveaux produits ECHO et les mises à jour de produit ainsi que les offres spéciales. Simplement visitez le: **www.echo-usa.com**

Please Print : Por Favor Enscriba Con Letra De Molde : En Lettre Carré S.V.P.

Confidential: Information provided will not be shared or sold

Purchaser's Name : Nombre del Comprador : Nom de l'acheteur		
Address : Dirección : Adresse		
City : Ciudad : Ville	*State : Estado : Province*	*Zip Code : Código Postal : Code Postal*
E-Mail Address : Dirección De Correo Electrónico : Courrier Électronique		
Phone Number : Número De Teléfono : Téléphone	*Date of Purchase : Fecha de la Compra : Date de l'achat*	
Where Purchased : Nombre del Almacén donde fue Comprado : Lieu d'achat		

Model Number : Numero del Modelo : No. de modéle	*Serial Number : Numero de Serie : No. de série*

Registering your purchase enables us to contact you in the unlikely event of a service update or product recall and verifies your ownership in the event of loss. : El registrar su compra nos permite estar en contacto con usted en caso de cualquier evento como el aviso de tiempo de servicio o la revocación del producto y verificación de propiedad en caso de robo o pérdida. : L'enregistrement de votre achat nous permettra de vous contacter dans le cas improbable de modifications des instructions d'entretien ou de rappel du produit et vérifier que vous êtes le propriétaire en cas de vol ou de perte.

Primary use of tool: ☐ Professional ☐ Homeowner ☐ Rental Equip.
Uso primario de la herramienta: ☐ Profesional ☐ Dueño de casa ☐ Alquiler
Usage principal : ☐ Professionnel ☐ Residential ☐ Location

Do you wish to receive periodic ECHO product information and special offers by e-mail? ☐ Yes ☐ No
¿Desea usted recibir información periódica y ofertas especiales por correo electronico sobre el producto ECHO? ☐ Yes ☐ No
Souhaitez-vous recevoir périodiquement de l'information sur les produits ECHO et les offres spéciales par courrier électronique ? ☐ Oui ☐ Non

Did you visit the ECHO website before purchasing your product?
☐ Yes ☐ No
Visitó usted la pagina web ECHO antes de comprar su producto?
☐ Si ☐ No
Avez-vous visité le site d'ECHO avant de procurer votre produit?
☐ Oui ☐ Non

What factor(s) most influenced your purchase?

☐ Performance	☐ Price	☐ Dealer
☐ Reliability	☐ Prior Experience	☐ Quality
☐ Friend/Family	☐ Brand	☐ Warranty

¿Qué factor(es) influenció más en su compra?

☐ Funcionamiento	☐ Precio	☐ Distribuidor
☐ Confiabilidad	☐ Experiencia Anterior	☐ Calidad
☐ Amigo/Familia	☐ Marca	☐ Garantía

Quel facteur (facteurs) vous a influencé le plus?

☐ Performance	☐ Prix	☐ Marchand
☐ Fiabilité	☐ Expérience	☐ Qualité
☐ Ami/Famille	☐ Marque	☐ Garantie

ECHO INC., 400 Oakwood Rd., Lake Zurich, IL 60047
1.800.432.ECHO WWW.ECHO-USA.COM

X7572270206 02-2012

U46212001001 - U46212999999

ECHO INCORPORATED
400 Oakwood Road
Lake Zurich, IL 60047
www.echo-usa.com