Operator's Manual
SRM-225
Straight Shaft Trimmer

⚠ WARNING

Burn Hazard

The muffler or catalytic muffler and surrounding cover may become extremely hot. Always keep clear of exhaust and muffler area, otherwise serious personal injury may occur.

⚠ WARNING

The engine exhaust from this product contains chemicals known to the State of California to cause cancer, birth defects or other reproductive harm.

⚠ WARNING

Read and understand all provided literature before use. Failure to do so could result in serious injury.

X7732278503
© 01/22 ECHO Incorporated

TABLE OF CONTENTS

Introduction 3
Additional or Replacement Manuals 3
Servicing Information 3
Parts and Serial Number 3
Warranty Registration 3
Service 3
Safety 4
Manual Safety Symbols and Important Information 4
International Symbols 5
Personal Condition and Safety Equipment 5
Equipment 8
Description 10
Contents 11
Assembly 12
Shield Installation 12
Nylon Line Head Installation 12
To Advance Trimmer Line 13
Remove Nylon Line Head 13
Support Handle Installation 13
Operation 14
Fuel 14
Starting Cold Engine 16
Starting Warm Engine 17
Stopping Engine 18
Applications 18
Operating Techniques - Nylon Line Head 18
Operating Techniques - Metal or Plastic Blade 19
Reaction Forces 20
Blade Cutting Problems 21
Maintenance 22
Skill Levels 22
Maintenance Intervals 22
Air Filter 23
Fuel Filter 23
Spark Plug 24
Cooling System 24
Exhaust System 26
Carburetor Adjustment 27
Lubrication 28
Nylon Line Head Disassembly Instructions 29
Nylon Line Replacement 30
Troubleshooting 32
Storage 33
Long Term Storage (Over 30 Days) 33
Specifications 34
Specifications 35

© 01/22 ECHO Incorporated

INTRODUCTION

Specifications, descriptions and illustrative material in this literature are as accurate as known at the time of publication, but are subject to change without notice. Illustrations may include optional equipment and accessories, and may not include all standard equipment.

Read and understand all provided literature. Literature contains specifications and information for safety, operation, maintenance, storage and assembly specific to this product.

Additional or Replacement Manuals

Replacement Operator, Safety Manuals, and Parts Catalogs are available from your ECHO dealer or at echo-latinamerica.com.

SERVICING INFORMATION

Parts and Serial Number

Genuine ECHO Parts and Assemblies for your products are available only from an Authorized ECHO Dealer. When you do need to buy parts **always** have the Model Number and Serial Number of the unit with you. You can find these numbers on the engine housing. For future reference, write them in the space provided below.

Model No._____

Serial No._____

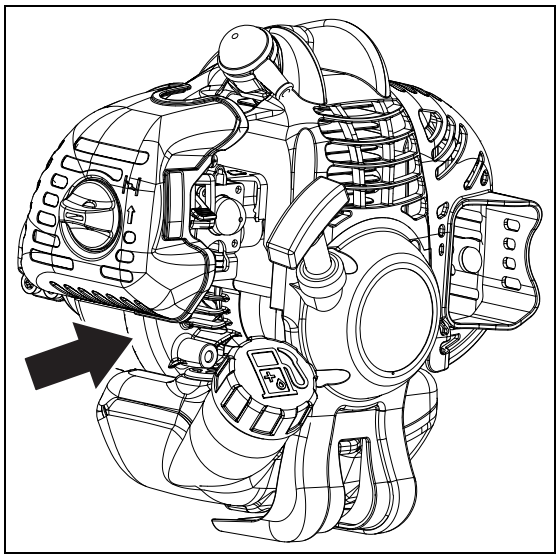

Warranty Registration

Your bill of sale must be provided to demonstrate proof of warranty.

Service

Service of this product during the warranty period must be performed by an Authorized ECHO Service Dealer. For the name and address of the Authorized ECHO Service Dealer nearest you, visit echo-latinamerica.com.

© 01/22 ECHO Incorporated

SAFETY

Manual Safety Symbols and Important Information

Throughout this manual and on the product itself, you will find safety alerts and helpful, informational messages preceded by symbols or key words. The following is an explanation of those symbols and key words and what they mean to you.

DANGER

The safety alert symbol accompanied by the word "DANGER" calls attention to an act or condition which WILL lead to serious personal injury or death if not avoided.

WARNING

The safety alert symbol accompanied by the word "WARNING" calls attention to an act or condition which CAN lead to serious personal injury or death if not avoided.

CAUTION

The safety alert symbol accompanied by the word "CAUTION" calls attention to an act or condition which may lead to minor or moderate personal injury if not avoided.

NOTICE

The enclosed message provides information necessary for the protection of the unit.

Note: This enclosed message provides tips for use, care and maintenance of the unit.

CIRCLE AND SLASH SYMBOL
This symbol means the specific action shown is prohibited. Ignoring these prohibitions can result in serious or fatal injury.

© 01/22 ECHO Incorporated

International Symbols

Symbol	Description	Symbol	Description	Symbol	Description	Symbol	Description
	Warning, See Operator's Manual	H	Carburetor Adjustment - High Speed Mixture		DO NOT Allow Flames or Sparks Near Fuel	Ignition ON I OFF O	Ignition ON / OFF
	Wear Eye, Ear and Head Protection	T	Carburetor Adjustment - Idle Speed		DO NOT Smoke Near Fuel		Purge Bulb
	Wear Hand and Foot Protection	L	Carburetor Adjustment - Low Speed Mixture		Choke Control "RUN" Position (Choke Open)		Choke Control "COLD START" Position (Choke Closed)
	Safety/Alert	STOP	Stop Switch		Keep Feet AwayFrom Blade		Rotating Cutting Attachment
	Hot Surface		Fuel and Oil Mixture		Thrown Objects		Direction of Blade
		AVOID KICKOUT. Keep Bystanders At Least 15 m (50 feet) Away					
		Beware Thrown Objects Wear Eye Protection					Keep Bystanders and Helpers Away 15 m (50 ft.)

Personal Condition and Safety Equipment

WARNING

Cancer and Reproductive Harmwww.P65Warnings.ca.gov

WARNING

Users of this product risk injury to themselves and others if the unit is used improperly and/or safety precautions are not followed. Proper clothing and safety gear must be worn when operating unit.

Physical Condition

Your judgment and physical dexterity may not be good:

- If you are tired or sick.
- If you are taking medication.
- If you have taken alcohol or drugs.

Operate unit only if you are physically and mentally well.

© 01/22 ECHO Incorporated

Eye Protection

- **Eye protection that meets ANSI Z87.1 or CE requirements must be worn whenever you operate the unit.**
- **For additional safety, a full-face shield may be worn over safety glasses or goggles to provide protection from sharp branches or flying debris.**

Hand Protection

Wear sturdy, no-slip, rubber work gloves to improve your grip on the handles. Gloves also provide protection against cuts and scratches, cold environments, and reduce the transmission of machine vibration to your hands.

Hearing/Ear Protection

ECHO recommends wearing hearing protection whenever unit is used.

Breathing Protection

Operators who are sensitive to dust or other common airborne allergens may need to wear a dust mask to prevent inhaling these materials while operating unit. Dust masks can provide protection against dust, plant debris, and other plant matter such as pollen. Make sure the mask does not impair your vision, and replace the mask as needed to prevent air restrictions.

Proper Clothing

Wear snug-fitting, durable clothing:

- Pants should have long legs, shirts should have long sleeves.
- DO NOT WEAR SHORTS.
- DO NOT WEAR TIES, SCARVES, JEWELRY, or clothing with loose or hanging items that could become entangled in moving parts or surrounding growth.
- Keep clothing buttoned or zipped, and keep shirt tails tucked in.

Wear sturdy work shoes with nonskid rubber soles:

- DO NOT WEAR OPEN TOED SHOES.
- DO NOT OPERATE UNIT BAREFOOTED.

Keep long hair away from engine and air intake. Retain hair with cap or net.

Heavy protective clothing can increase operator fatigue, which may lead to heat stroke. Schedule heavy work for early morning or late afternoon hours when temperatures are cooler.

⚠ WARNING

The components of this machine generate an electromagnetic field during operation, which may interfere with some pacemakers. To reduce the risk of serious or fatal injury, persons with pacemakers should consult with their physician and the pacemaker manufacturer before operating this machine. In the absence of such information, ECHO does not recommend the use of this machine by anyone who has a pacemaker.

© 01/22 ECHO Incorporated

Extended Operation and Extreme Conditions

⚠ CAUTION

Prolonged exposure to cold and/or vibration may result in injury. Read and follow all safety and operation instructions to minimize risk of injury. Failure to follow instructions may result in painful wrist/hand/arm injuries.

It is believed that a condition called Raynaud's Phenomenon, which affects the fingers of certain individuals, may be brought about by exposure to vibration and cold. Exposure to vibration and cold may cause tingling and burning sensations, followed by loss of color and numbness in the fingers. The following precautions are strongly recommended, because the minimum exposure, which might trigger the ailment, is unknown.

- Keep your body warm, especially the head, neck, feet, ankles, hands, and wrists.
- Maintain good blood circulation by performing vigorous arm exercises during frequent work breaks, and also by not smoking.
- Limit the hours of operation. Try to fill each day with jobs where operating the unit or other hand-held power equipment is not required.
- If you experience discomfort, redness, and swelling of the fingers followed by whitening and loss of feeling, consult your physician before further exposing yourself to cold and vibration.

Repetitive Stress Injuries (RSI)

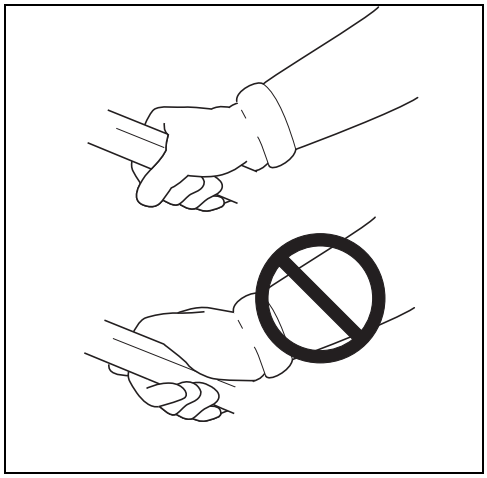

It is believed that overusing the muscles and tendons of the fingers, hands, arms, and shoulders may cause soreness, swelling, numbness, weakness, and extreme pain in those areas. Certain repetitive hand activities may put you at a high risk for developing a Repetitive Stress Injury (RSI). An extreme RSI condition is Carpal Tunnel Syndrome (CTS), which could occur when your wrist swells and squeezes a vital nerve that runs through the area. Some believe that prolonged exposure to vibration may contribute to CTS. CTS can cause severe pain for months or even years.

To reduce the risk of RSI/CTS, do the following:

- Avoid using your wrist in a bent, extended, or twisted position. Instead try to maintain a straight wrist position. Also, when grasping, use your whole hand, not just the thumb and index finger.
- Take periodic breaks to minimize repetition and rest your hands.
- Reduce the speed and force with which you do the repetitive movement.
- Do exercise to strengthen the hand and arm muscles.
- Immediately stop using all power equipment and consult a doctor if you feel tingling, numbness, or pain in the fingers, hands, wrists, or arms. The sooner RSI/CTS is diagnosed, the more likely permanent nerve and muscle damage can be prevented.

⚠ DANGER

All over head electrical conductors and communications wires can have electricity flow with high voltages. This unit is not insulated against electrical current. Never touch wires directly or indirectly, otherwise serious injury or death may result.

© 01/22 ECHO Incorporated

⚠ DANGER

Do not operate this product indoors or in inadequately ventilated areas. Engine exhaust contains poisonous emissions and can cause serious injury or death.

Read the Manuals

- Provide all users of this equipment with the Operator's Manual and Safety Manual for instructions on Safe Operation.

Clear the Work Area

- Spectators and fellow workers must be warned, and children and animals prevented from coming nearer than 15 m (50 ft.) while the unit is in use.

Keep a Firm Grip

- Always hold throttle handle and support handle with thumbs and fingers tightly encircling the handles.

Keep a Solid Stance

- Maintain footing and balance at all times. Do not stand on slippery, uneven or unstable surfaces. Do not work in odd positions or on ladders. Do not over reach.

Avoid Hot Surfaces

- Keep exhaust area clear of flammable debris. Avoid contact during and immediately after operation.

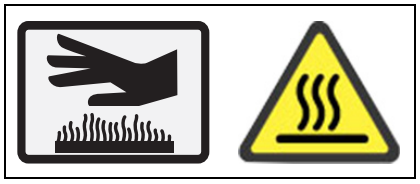

Equipment

⚠ WARNING

Use only ECHO attachments. Serious injury may result from the use of a non-approved attachment combination. ECHO, Incorporated will not be responsible for the failure of cutting devices, attachments or accessories which have not been tested and approved by ECHO. Read and comply with all safety instructions listed in this manual and safety manual.

- Check unit for loose/missing nuts, bolts, and screws. Tighten and/or replace as needed.
- Inspect shield for damage and ensure that the cut-off knife is securely in place. Replace if either is damaged or missing.
- Check that the cutting attachment is firmly attached and in safe operating condition.
- Check that handle and harness (if included) are adjusted for safe, comfortable operation. See Assembly Section for proper adjustment.

⚠ WARNING

Moving parts can amputate fingers or cause severe injuries. Keep hands, clothing and loose objects away from all openings.

- *ALWAYS stop engine, disconnect spark plug, and make sure all moving parts have come to a complete stop before removing obstructions, clearing debris, or servicing unit.*
- *DO NOT start or operate unit unless all guards and protective covers are properly assembled to unit.*

© 01/22 ECHO Incorporated

- NEVER reach into any opening while the engine is running. Moving parts may not be visible through openings.

WARNING

Periodically Check fuel system (fuel lines, vent, grommet, fuel tank, and fuel cap) for leaks especially if the unit is dropped. If damage or leaks are found, do not use unit, otherwise serious personal injury or property damage may occur. Have unit repaired by an authorized servicing dealer before using.

© 01/22 ECHO Incorporated

DESCRIPTION

Locate the safety decal(s) on your unit. Make sure the decal(s) is legible and that you understand and follow the instructions on it. If a decal cannot be read, a new one can be ordered from your ECHO dealer.

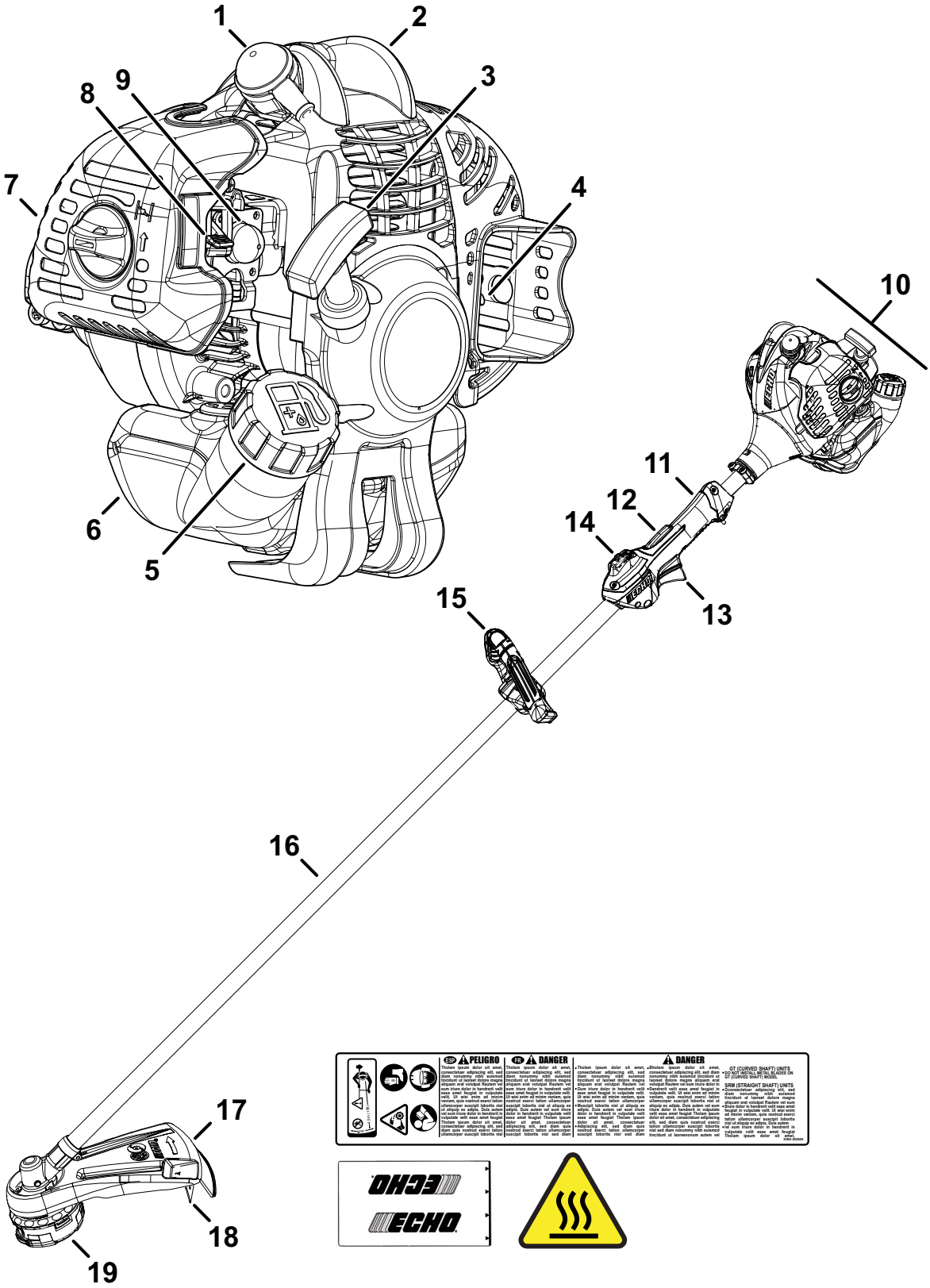

© 01/22 ECHO Incorporated

1. Spark Plug
2. Top Guard
3. Recoil Starter Handle
4. Spark Arrestor Muffler or Spark Arrestor Muffler with Catalyst
5. Fuel Tank Cap
6. Fuel Tank
7. Air Cleaner
8. Choke Lever
9. Purge Bulb
10. Power Head
11. Throttle Handle - For Right Hand
12. Throttle Trigger Lockout
13. Throttle Trigger
14. Stop Switch
15. Support Handle - For Left Hand
16. Drive Shaft Assembly
17. Debris Shield with Cut-Off Knife
18. Cut-Off Knife
19. Nylon Cutter Head

CONTENTS

The ECHO product you purchased has been factory pre-assembled for your convenience. Due to packaging restrictions, some assembly may be necessary.

After opening the carton, check for damage. Immediately notify your retailer or ECHO Dealer of damaged or missing parts. Use the contents list to check for missing parts.

_____ 1 - Power Head / Drive Shaft Assembly

_____ 1 - Operator’s Manual

_____ 1 - Nylon Trimmer Head

_____ 1 - Plastic Shield

_____ 1 - Shield Plate

_____ 3 - 5 x 16 mm Screws (shield mount)

© 01/22 ECHO Incorporated

ASSEMBLY

Shield Installation

(Nylon line operation)

Parts required: Debris Shield, Shield Plate, three 5 x 16 mm screws.

WARNING

This unit cannot be converted for brushcutter use.

1. Place shield (A) on the bottom of the bearing housing flange.
2. Place shield plate (B) on shield, align holes. Install three screws from bottom through plate and shield into gear case.
3. Assemble adapter plate (C) onto PTO shaft.

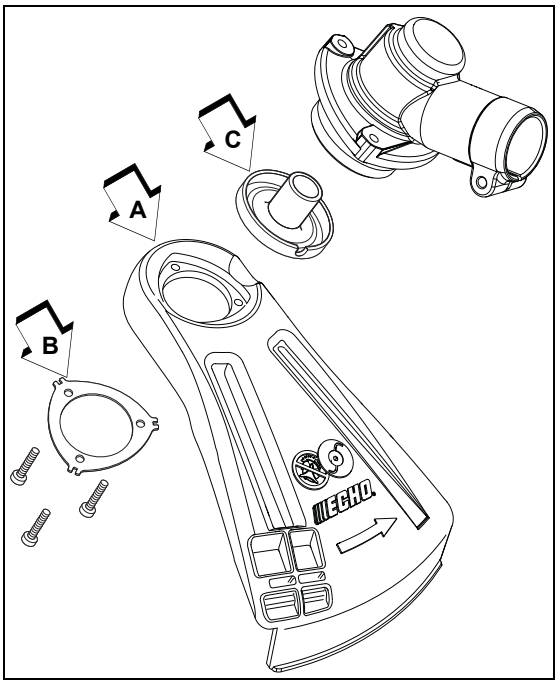

Nylon Line Head Installation

Parts required: Nylon Line Head.

CAUTION

Wear Gloves or personal injury may result:

- ***Cutoff knife is sharp.***
- ***Gearcase and surrounding area may be hot.***

1. Be sure adapter plate (A) remains on PTO shaft (B).
2. Align locking hole in upper plate with notch in edge of gear housing and insert head locking tool (C).

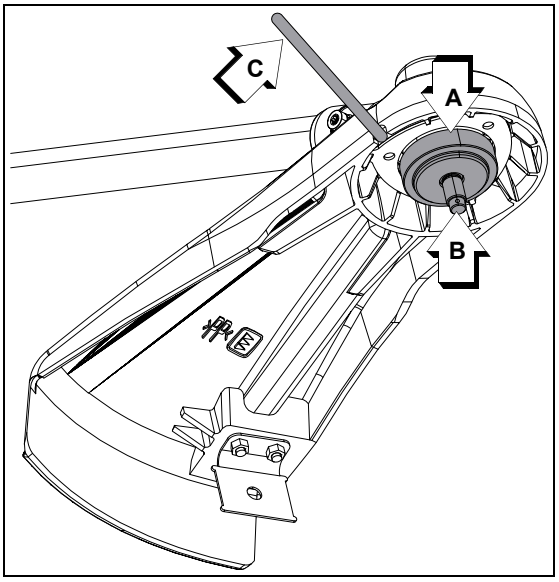

© 01/22 ECHO Incorporated

3. Thread line head (D) onto shaft by turning it counterclockwise until head is tight against the adapter plate.
4. Remove locking tool (E).

Note: Your nylon line head may appear different than nylon line head shown.

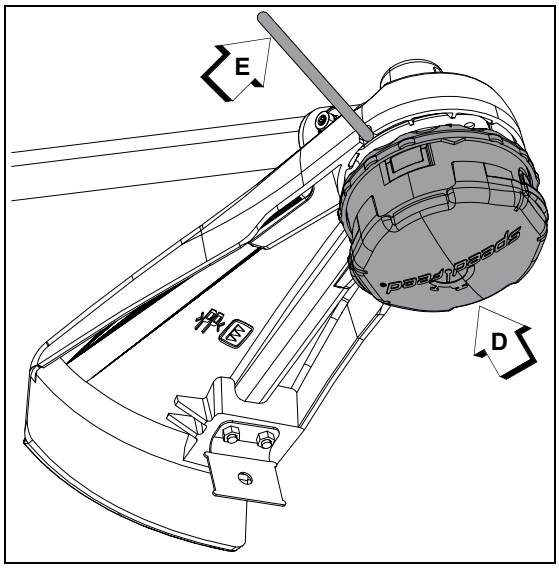

To Advance Trimmer Line

See Maintenance Section for nylon line replacement.

Note: To advance trimmer line, tap trimmer head against the ground while the head is turning at normal operating speed.

Remove Nylon Line Head

Note: Do not disassemble nylon line head.

1. Align locking hole in upper plate with notch in edge of gear housing and insert head locking tool (A).
2. Remove line head (B) by turning it clockwise until head is completely off of shaft.
3. Remove locking tool (A).

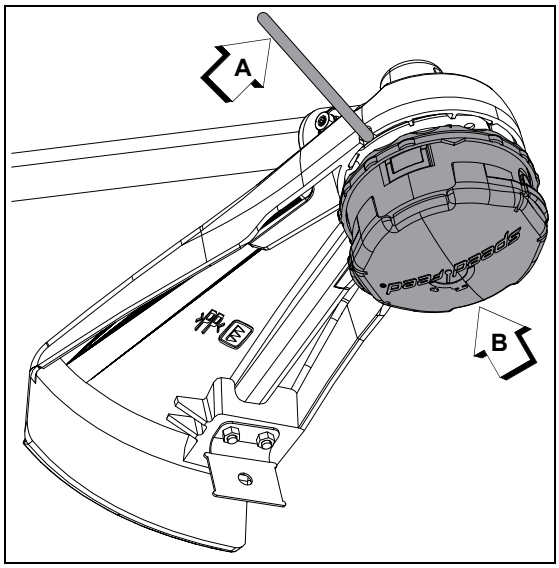

Support Handle Installation

Note: Label shows minimum spacing for support handle location.

1. If necessary, position support handle for comfortable operation and securely tighten screws.

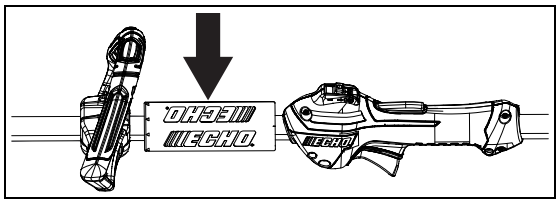

© 01/22 ECHO Incorporated

OPERATION

⚠ WARNING

Moving parts can amputate fingers or cause severe injuries. Keep hands, clothing and loose objects away from all openings. Always stop engine, disconnect spark plug, and make sure all moving parts have come to a complete stop before removing obstructions, clearing debris, or servicing unit.

⚠ WARNING

Engine exhaust IS HOT, and contains Carbon Monoxide (CO), a poison gas. Breathing CO can cause unconsciousness, serious injury, or death. Exhaust can cause serious burns. ALWAYS position unit so that exhaust is directed away from your face and body.

⚠ WARNING

Operation of this equipment may create sparks that can start fires around dry vegetation.This unit is equipped with a spark arrestor to prevent discharge of hot particles from the engine. Metal cutters can also create sparks if the cutter strikes rocks, metal, or other hard objects. Contact local fire authorities for laws or regulations regarding fire prevention requirements.

Fuel

NOTICE

Use of unmixed, improperly mixed, or fuel older than 90 days, (stale fuel), may cause hard starting, poor performance, or severe engine damage and void the product warranty. Read and follow instructions in the Storage section of this manual.

⚠ WARNING

Fuel containing more than 25% ethanol is NOT approved for use in ECHO 2-stroke gasoline engines. Fuel containing more than 25% ethanol may cause performance problems, loss of power, overheating, fuel vapor lock, and unintended machine operation, including, but not limited to, improper clutch engagement. Fuel containing more than 25% ethanol may also cause premature deterioration of fuel lines, gaskets, carburetors and other engine components.

Fuel Requirements

Gasoline - Use 89 Octane (mid grade or higher) gasoline known to be good quality. Gasoline may contain up to 25% Ethanol. Gasoline containing methanol (wood alcohol) is NOT approved.

Two Stroke Oil - A two-stroke engine oil meeting ISO-L-EGD (ISO/CD 13738) and J.A.S.O. FD Standards must be used. ECHO brand 2-Stroke Oil meets these standards. Engine problems due to inadequate lubrication caused by failure to use an ISO-L-EGD (ISO/CD 13738) and J.A.S.O. FD certified oil will void the two-stroke engine warranty.

NOTICE

ECHO branded 2-stroke oils may be mixed at 50:1 ratio for application in all ECHO engines sold in the past regardless of ratio specified in those manuals.

© 01/22 ECHO Incorporated

Handling Fuel

DANGER

Fuel is VERY flammable. Use extreme care when mixing, storing or handling, or serious personal injury may result.

- ***Use an approved fuel container.***
- ***DO NOT smoke near fuel.***
- ***DO NOT allow flames or sparks near fuel.***
- ***Fuel tanks/cans may be under pressure. Always loosen fuel caps slowly allowing pressure to equalize.***
- ***NEVER refuel a unit when the engine is HOT or RUNNING!***
- ***DO NOT fill fuel tanks indoors. ALWAYS fill fuel tanks outdoors over bare ground.***
- ***DO NOT overfill fuel tank. Wipe up spills immediately.***
- ***Securely tighten fuel tank cap and close fuel container after refueling.***
- ***Inspect for fuel leakage. If fuel leakage is found, do not start or operate unit until leakage is repaired.***
- ***Move at least 3 m (10 ft.) from refueling location before starting the engine.***

Mixing Instructions

1. Fill an approved fuel container with half of the required amount of gasoline.
2. Add the proper amount of 2-stroke oil to gasoline.
3. Close container and shake to mix oil with gasoline.
4. Add remaining gasoline, close fuel container, and remix.

Fuel to Oil Mix - 50:1 Ratio			
US		Metric System	
Gas	Oil	Gas	Oil
Gallons	Oz.	Liter	cm^3
1	2.6	5	100
2	5.2	10	200
5	13	25	500

NOTICE

Spilled fuel is a leading cause of hydrocarbon emissions. Some states may require the use of automatic fuel shut-off containers to reduce fuel spillage.

After use

- DO NOT store a unit with fuel in its tank. Leaks can occur. Return unused fuel to an approved fuel storage container.

Storage - Fuel storage laws vary by locality. Contact your local government for the laws affecting your area. As a precaution, store fuel in an approved, airtight container. Store in a well-ventilated, unoccupied building, away from sparks and flames.

NOTICE

Stored fuel ages. Do not mix more fuel than you expect to use in thirty (30) days, ninety (90) days when a fuel stabilizer is added.

NOTICE

Stored two-stroke fuel may separate. ALWAYS shake fuel container thoroughly before each use.

© 01/22 ECHO Incorporated

Starting Cold Engine

⚠ WARNING

The attachment will operate immediately when the engine starts, and could result in possible serious injury. Keep movable parts of the attachment away from objects that could become entangled or thrown, and surfaces that could cause loss of control.

1. *Stop Switch*

   Move stop switch button (A) forward, away from the STOP position.

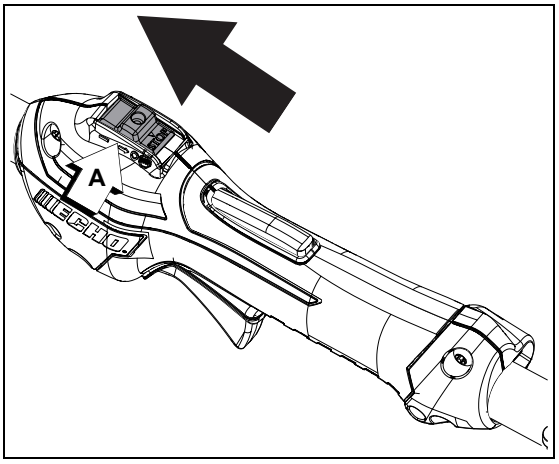

2. *Choke*

   Move choke lever (B) to COLD START ( ) position.

3. *Purge Bulb*

   Pump purge bulb (C) until fuel is visible and flows freely in the clear fuel tank return line. Pump bulb an additional four or five times.

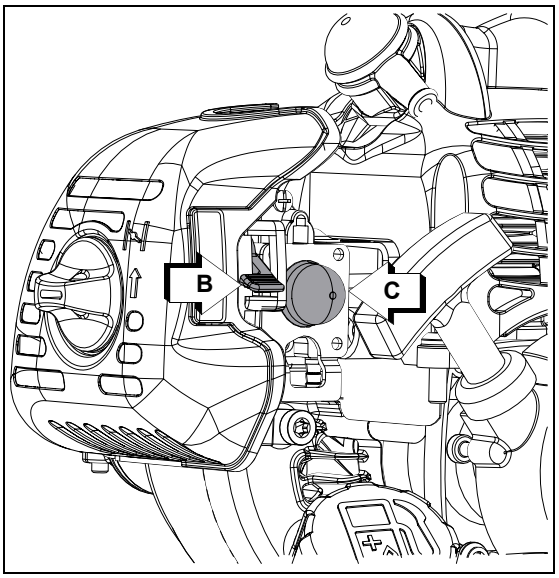

4. *Recoil Starter*

   Lay the unit on a flat area and keep movable attachment parts clear of all obstacles. Firmly grasp throttle handle and throttle trigger lockout with left hand and fully depress throttle trigger to wide open position. Rapidly pull recoil starter handle/rope (D) until engine fires (or maximum five pulls).

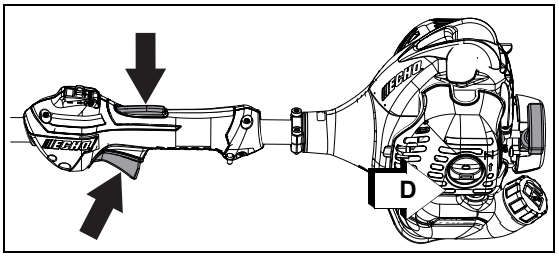

© 01/22 ECHO Incorporated

5. *Choke*

   After engine fires (or five pulls), move choke (B) to the RUN ( ) (open) position. Firmly grasp throttle handle and throttle trigger lockout with left hand and fully depress throttle trigger to wide open position. Pull starter handle/rope until engine starts and runs. Release throttle trigger and allow unit to warm up at idle for several minutes.

Note: If engine does not start with choke in “RUN” position after five pulls, repeat instructions 2 - 5.

6. *Throttle Trigger*

   After engine warm-up, grip throttle handle and support handle. Depress the throttle trigger lockout, and gradually depress throttle trigger to increase engine RPM to operating speed.

Starting Warm Engine

The starting procedure is the same as Cold Start except DO NOT close the choke, and do not hold throttle trigger fully depressed.

⚠ WARNING

The attachment should not move at idle, otherwise serious personal injury may result.

Note: If attachment moves, readjust carburetor according to “Carburetor Adjustment” instructions in this manual or see your ECHO Dealer.

1. *Stop Switch*

   Move stop switch button (A) forward away from the STOP position.

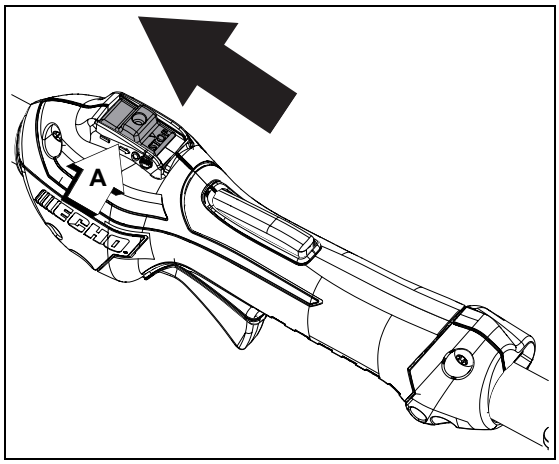

2. *Purge Bulb*

   Pump purge bulb (C) until fuel is visible in the “Clear” fuel return line. Pump bulb an additional four or five times.

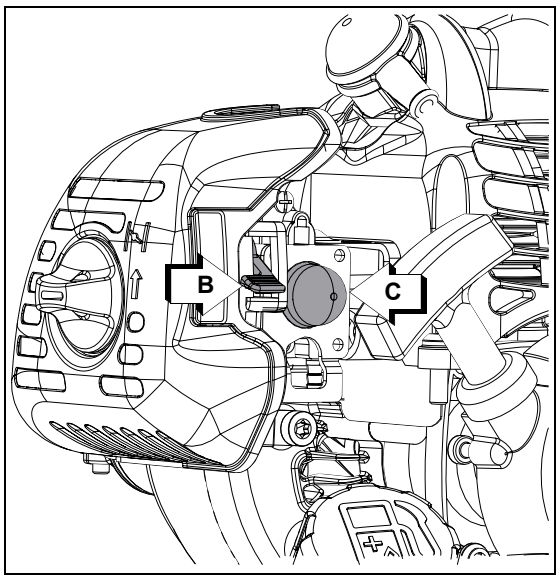

© 01/22 ECHO Incorporated

3. *Recoil Starter*

   Lay the unit on a flat area and keep movable attachment parts clear of all obstacles. Firmly grip throttle handle and throttle trigger lockout with left hand. Rapidly pull recoil starter handle/rope (D) until engine fires.

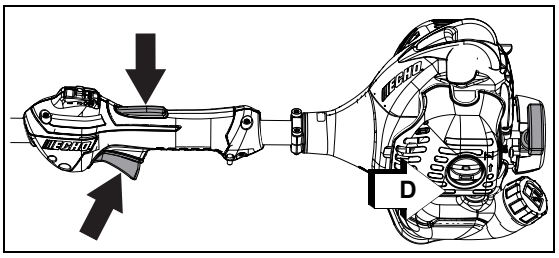

Note: If engine does not start after five pulls, use Cold Start Procedure.

Stopping Engine

1. *Throttle*

   Release throttle trigger and allow engine to return to idle before shutting off engine.

2. *Stop Switch*

   Move stop switch button (A) backward to STOP position.

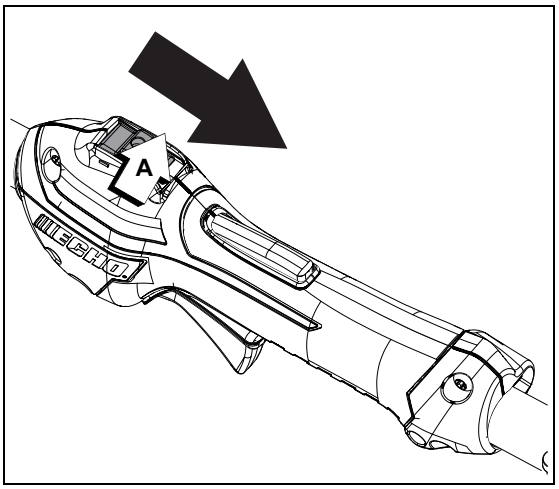

⚠ WARNING

If engine does not stop when stop switch is moved to STOP position, close choke - COLD START position - to stall engine. Have your ECHO dealer repair stop switch before using unit again.

Applications

⚠ WARNING

Do not install blades on GT (Curved Shaft) trimmers.

Operating Techniques - Nylon Line Head

Nylon line heads may be used for trimming, scything, edging, and scalping of grass and light weeds.

Trimming

Feed the spinning line into the material to be cut. Tilt the line head to one side to direct cutting debris away from you:

- Model SRM/DSRM/PAS/DPAS/SB/TX/C/T (Straight shaft, counter-clockwise line head rotation) - Tilt the cutting head down on the right side while cutting to direct cutting debris away from operator. Feed the line gradually into the material you wish to cut, avoiding contact with fences or other barriers.
- GT models: Tilt cutting head to the left while cutting to direct debris away from the operator.

© 01/22 ECHO Incorporated

Scything

Scything - Swing the cutting head in a level arc, gradually feeding the line into the material being cut. Move forward with each arc to cut a swath. Width of cutting swath depends on arc. Use a larger arc for a wider swath, or a smaller arc for a narrow swath. Keep line head tilted to direct cutting debris forward or away from you.

Edging and Scalping

Both of these are done with the nylon line cutting head tilted at a steep angle. Scalping is removing top growth, leaving the earth bare. Edging is trimming the grass back where it has spread over a pavement or driveway. During both edging and scalping, hold the unit at a steep angle in a position where the debris, and any dislodged dirt and stone, will not come back towards you even if it ricochets off the hard surface.

General

- Debris flows in direction of line head rotation. Change line head position to assure debris flow is directed away from operator.
- Keep cutting line away from wire fences to avoid entanglement.
- Operate trimmer only with cutting head below knee height.

Operating Techniques - Metal or Plastic Blade

Brushcutter blades may be used to cut and trim a wide variety of materials. Refer to the blade selection section for determining the correct blade for the application.

Scything (3, 8, and 80 tooth weed/grass, and brush blades)

- To cut large sections of field grass and weeds swing the cutting head in a level arc, gradually feeding the blade into the material being cut. Adjust throttle speed according to your work.
- Do not swing the main pipe with arms. Turn hips to swing the blade horizontally from right to left, and cut weeds on the left side of the blade.
- Do not scythe back and forth as the grass may scatter and kickback may occur easily.
- Tilt blade left by 5 to 10 degrees so that cut grasses will push left, making progress easier.
- Move forward with each arc to cut a swath.

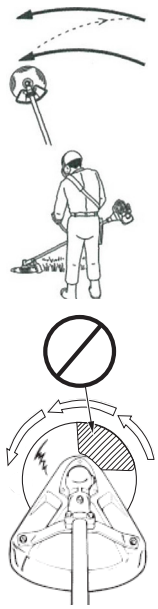

- Width of cutting swath depends on arc. Use a larger arc for a wider swath, or a smaller arc for a narrow swath. Suggested cutting width is about 1.5 m (4.9 ft).
- When scything large brush up to 0.5" diameter from right to left, avoid cutting with highlighted section.

© 01/22 ECHO Incorporated

Reaction Forces

⚠ WARNING

- **The cutting attachment will continue to rotate even after the throttle is released, maintain control of the unit until it has come to a complete stop.**
- **Blade thrust may occur when the spinning blade contacts an object that it does not immediately cut. Following proper cutting techniques will prevent blade thrust.**
- **Blade thrust can be violent enough to cause the unit and/or operator to be propelled in any direction, and possibly lose control of the unit.**
- **Blade thrust can occur without warning if the blade snags, stalls or binds.**
- **Blade thrust is more likely to occur in areas where it is difficult to see the material being cut.**

Push or Pull - Kickout

During normal use, operating a brushcutter with a circular metal blade can produce sudden strong reaction forces that are difficult to control. Strong reaction forces can cause a loss of balance or loss of control of the equipment, resulting in serious injury to operator and bystanders.

Understanding what causes these reactive forces may help you to avoid them, and can help you to maintain control of the equipment if you experience a sudden reaction during cutting. Reactive forces occur when the force being applied by the cutting teeth of a blade meet resistance, and some of the cutting force is directed back toward the equipment. The greater the cutting force or the amount of resistance, the greater the reactive force.

Push and Pull Forces

Push and pull forces are reactive forces that push the equipment directly toward the operator, or that pull the equipment directly away from the operator. These forces are the result of cutting on the sides of the blade. The direction of the force depends on the side of the blade being used, and the direction of blade rotation at the point of contact. The reactive force is in the opposite direction of blade rotation at the contact point, regardless of where the contact is being made. These types of reactive forces are also called “Blade Thrust.”

As shown in the illustration, a blade turning counterclockwise will cause the equipment to pull away from the operator if the point of cutting resistance is on the left side of the blade. If the point of cutting resistance is on the right side of the blade, the equipment will push back toward the operator. In both examples, the reactive force is in the opposite direction of blade rotation at the contact point where resistance occurs.

Kickout

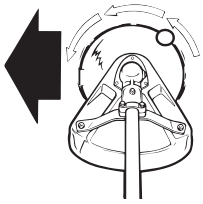

Kickout is also a reactive force caused by resistance to cutting, but the direction of blade thrust is lateral (to the left or right of the blade), instead of forward or back toward the operator. In most cases, Push, Pull, and Kickout can be reduced or eliminated by:

- Using the correct blade for the cutting job
- Using properly sharpened blades

© 01/22 ECHO Incorporated

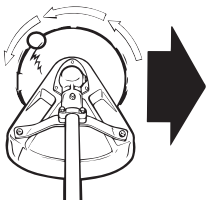

- Applying consistent, even force to the blade during the cut
- Avoiding obstacles and ground hazards
- Using extra care when cutting harder materials such as extremely dry brush, saplings, and small trees
- Cutting from a stable, secure position

Blade Cutting Problems

Binding - Blades may bind in the cut if dull or forced. Binding can damage blade, and result in blade breakage or injury from fragments and flying debris. If a blade binds in a cut, don't try to get it out by applying "up and down" force to pry the cut open. Applying prying force to the blade can bend the blade, and result in blade failure and injury.

To free a blade that is bound in the cut, stop the unit, and support the trimmer or brushcutter to keep stress off the blade. Push the tree away from the entry point of the cut to open the cut, and pull the blade directly away from the cut in a straight-line motion. Use caution when releasing the tree to avoid being struck by spring-back or falling.

Inspect the blade for damage before proceeding. Sharpen teeth if dull, or replace blade if cracked, bent, missing teeth, or otherwise damaged.

To prevent binding:

- Keep blades sharp
- Avoid excessive pressure during cuts
- Don't exceed cutting capacity of blade
- Don't use blades with damaged or missing cutting teeth
- Don't rock blades in cut

© 01/22 ECHO Incorporated

MAINTENANCE

WARNING

Moving parts can amputate fingers or cause severe injuries. Keep hands, clothing and loose objects away from all openings. Always stop engine, disconnect spark plug, and make sure all moving parts have come to a complete stop before removing obstructions, clearing debris, or servicing unit. Allow unit to cool before performing service. Wear gloves to protect hands from sharp edges and hot surfaces.

Your ECHO unit is designed to provide many hours of trouble free service. Regular scheduled maintenance will help your unit achieve that goal. If you are unsure or are not equipped with the necessary tools, you may want to take your unit to an ECHO Service Dealer for maintenance. To help you decide whether you want to DO-IT-YOURSELF or have the ECHO Dealer do it, each maintenance task has been graded. If the task is not listed, see your ECHO Dealer for repairs.

Skill Levels

Level 1 = Easy to do. Common tools may be required.

Level 2 = Moderate difficulty. Some specialized tools may be required.

Maintenance Intervals

COMPONENT/SYSTEM	MAINTENANCE PROCEDURE	REQ'D SKILL LEVEL	DAILY OR BEFORE USE	EVERY REFUEL	3 MONTHS	YEARLY
Air Filter	Inspect / Clean	1	I / C*		R*	
Choke Shutter	Inspect / Clean	1	I / C			
Fuel Filter	Inspect / Replace	1			I*	I / R*
Fuel Cap Gasket	Inspect / Replace	1			I*	R*
Fuel System	Inspect / Replace	1	I*	I*		
Spark Plug	Inspect / Clean	1			I / C / R*	
Cooling System	Inspect / Clean	2	I / C			
Muffler Spark Arrestor	Inspect / Clean / Replace	2			I / C / R*	
Cylinder Exhaust Port	Inspect / Clean / De-carbon	2			I / C	
Drive Shaft (Flex Cable Models)	Grease	2			I[1]	
Gear Housing	Grease	2			I[2]	
Recoil Starter Rope	Inspect / Clean	1	I / C*			
Screws/Nuts/Bolts	Inspect / Tighten / Replace	1	I*			

MAINTENANCE PROCEDURE LETTER CODES: I = INSPECT, C = CLEAN, R = REPLACE

IMPORTANT NOTE - Time intervals shown are maximum. Actual use and your experience will determine the frequency of required maintenance

.

* Replacement is recommended based on the finding of damage or wear during inspection

MAINTENANCE PROCEDURE NOTES:

[1]Apply lithium-based grease every 25 hours of use.

[2] Apply lithium-based grease every 50 hours of use.

© 01/22 ECHO Incorporated

Air Filter

Level 1.

Parts required: Tune-Up Kit.

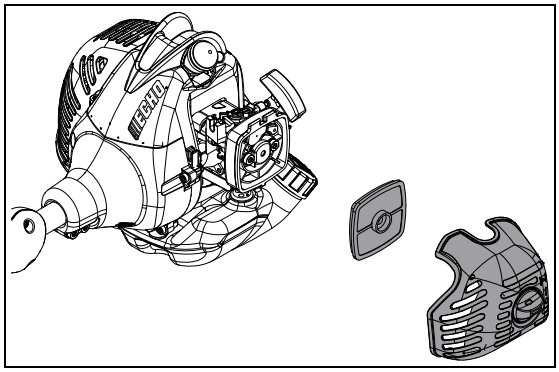

1. Close choke (COLD START [ ] position). This prevents dirt from entering the carburetor throat when the air filter is removed. Brush accumulated dirt from air cleaner area.
2. Remove air filter cover. Brush dirt from inside cover.
3. Replace filter if it is damaged, fuel soaked, very dirty, or the rubber sealing edges are deformed.
   - Lightly brush debris from filter.
   - Soak heavily soiled filters in water/detergent solution to loosen dirt, then brush lightly.
   - Rinse with clean water and allow to dry completely before reuse.
4. Install air filter in air filter case.
5. Install air filter cover.

Fuel Filter

Level 1.

Parts required: Tune-Up Kit.

DANGER

Fuel is VERY flammable. Use extreme care when mixing, storing or handling, or serious personal injury may result.

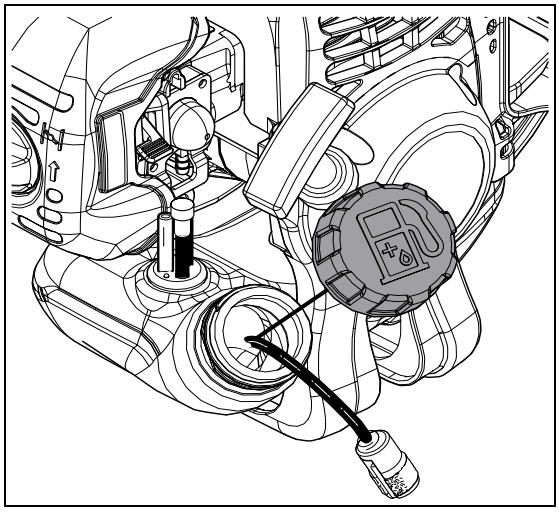

1. Use a clean rag to remove loose dirt from around fuel cap and empty fuel tank.
2. Pull the fuel filter from the fuel tank.
3. Remove the filter from the line and install the new filter.

Note: Federal EPA regulations require all model year 2012 and later gasoline powered engines produced for sale in the United States to be equipped with a special low permeation fuel supply hose between the carburetor and fuel tank. When servicing model year 2012 and later equipment, only fuel supply hoses certified by EPA can be used to replace the original equipment supply hose. Fines up to $37,500 may be enforced for using an un-certified replacement part.

© 01/22 ECHO Incorporated

Spark Plug

Level 2.

Parts required: Tune-Up Kit.

NOTICE

Use only NGK BPM8Y spark plug otherwise severe engine damage may occur.

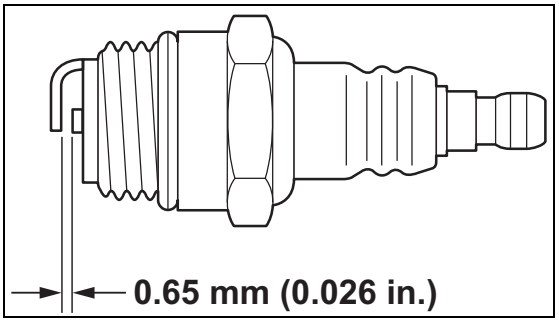

1. Remove spark plug and check for fouling, worn and rounded center electrode.
2. Clean the plug or replace with a new one. DO NOT sand blast to clean. Remaining sand will damage engine.
3. Adjust spark plug gap by bending outer electrode.
4. Tighten spark plug to 150-170 kgf•cm (130-150 lbf•in).

Cooling System

Level 2.

NOTICE

To maintain proper engine operating temperatures, cooling air must pass freely through the cylinder fin area. This flow of air carries combustion heat away from the engine.

Overheating and engine seizure can occur when:

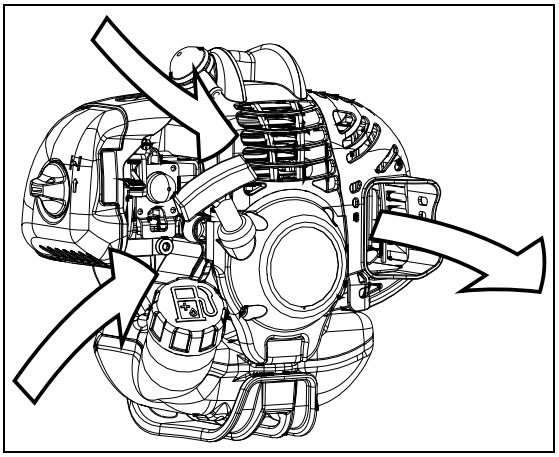

- Air intakes are blocked, preventing cooling air from reaching the cylinder.
- Dust and grass build up on the outside of the cylinder. This build up insulates the engine and prevents the heat from leaving.

Removal of cooling passage blockages or cleaning of cooling fins is considered “Normal Maintenance.” Any failure attributed to lack of maintenance is not warranted.

1. Remove spark plug lead.
2. Remove air cleaner cover (A).
3. Remove engine cover (B).

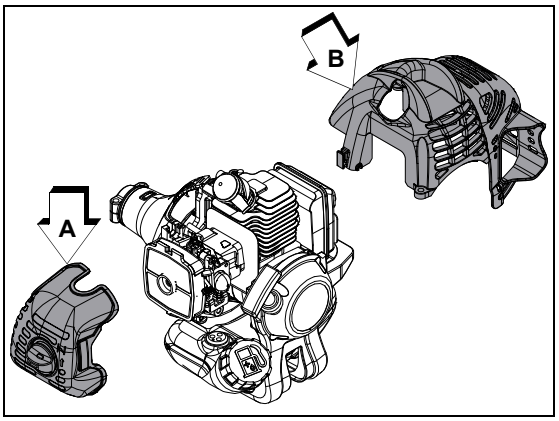

© 01/22 ECHO Incorporated

NOTICE

DO NOT use a metal scraper to remove dirt from the cylinder fins.

4. Use brush to remove dirt from the cylinder fins.
5. Remove ignition wires from clip for cleaning.

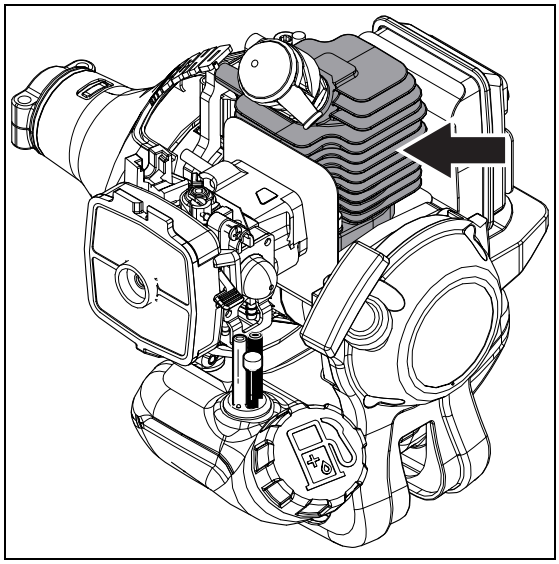

6. Remove grass and leaves from the grid between the recoil starter and fuel tank.
7. Assemble components in reverse order.

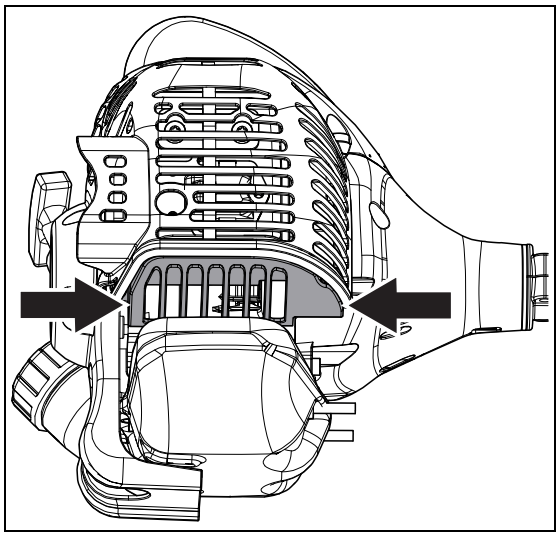

© 01/22 ECHO Incorporated

Exhaust System

Spark Arrestor Screen

Level 2.

Parts required: Spark Arrestor Screen, Gasket.

1. Remove the engine cover.
2. Place piston at Top Dead Center (TDC) to prevent carbon and dirt from entering cylinder.
3. Remove spark arrestor screen cover (C), gaskets (D), (E), and screen (F), from muffler body.
4. Clean carbon deposits from muffler components.

Note: When cleaning carbon deposit, be careful not to damage the catalytic element inside muffler.

5. Replace screen if it is cracked, plugged, or has holes burned through.
6. Assemble components in reverse order.

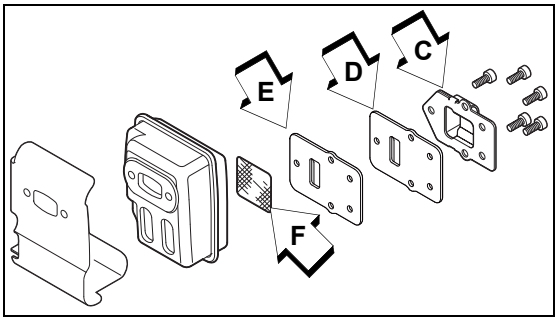

Exhaust Port Cleaning

Level 2.

Parts required: Heat shield (as needed).

1. Remove spark plug lead from spark plug, and remove engine cover.
2. Place piston at top dead center. Remove muffler (A) and heat shield (B).
3. Use a wood or plastic scraping tool to clean deposits from cylinder exhaust port (C).

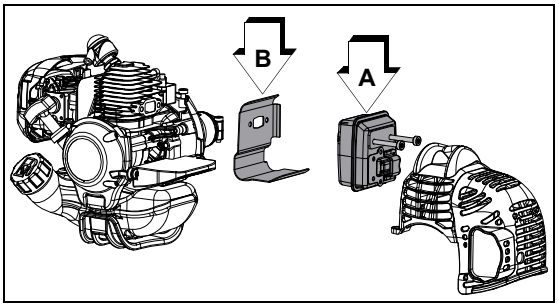

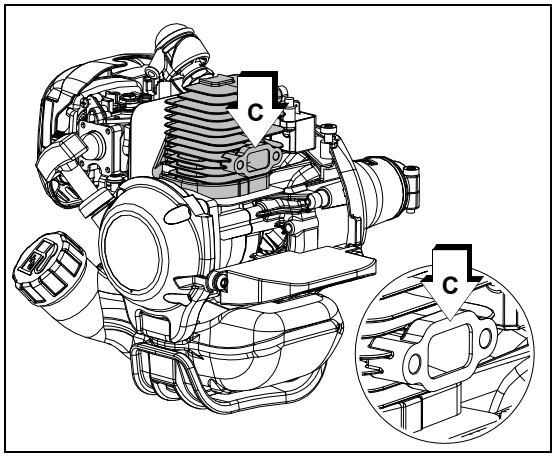

NOTICE

Never use a metal tool to scrape carbon from the exhaust port. Do not scratch the cylinder or piston when cleaning the exhaust port. Do not allow carbon particles to enter the cylinder.

4. Inspect heat shield, and replace if damaged.
5. Install heat shield and muffler.
6. Tighten muffler mounting bolts (or nuts) to 90-110 kgf•cm (80-95 lbf•in).
7. Install engine cover and attach spark plug lead.

© 01/22 ECHO Incorporated

8. Start engine, and warm to operating temperature.
9. Stop engine, and re-tighten mounting bolts (or nuts) to specifications.

Carburetor Adjustment

Level 2.

Engine Break-In

New engines must be operated a minimum duration of two tanks of fuel break-in before carburetor adjustments can be made. During the break-in period your engine performance will increase and exhaust emissions will stabilize. Idle speed can be adjusted as required.

High Altitude Operation

This engine has been factory adjusted to maintain satisfactory starting, emission, and durability performance up to 330 m (1,100 ft.) above sea level (ASL) (96.0 kPa). To maintain proper engine operation and emission compliance above 330 m (1,100 ft.) ASL the carburetor may need to be adjusted by an authorized ECHO service dealer.

NOTICE

If the engine is adjusted for operation above 330 m (1,100 ft.) ASL, the carburetor must be re-adjusted when operating the engine below 330 m (1,100 ft.) ASL, otherwise severe engine damage may result.

⚠ WARNING

Always operate unit in a clear work area. Keep hands clear of moving parts during adjustment otherwise serious bodily injury may occur.

Before adjustment make sure that:

- Check for correct spark plug, BPM8Y, with a gap of 0.026 in. (0.65 mm).
- The air filter element is clean and properly installed.
- The muffler spark arrestor screen and exhaust port are clear of carbon.
- The fuel lines, tank vent, and fuel filter are in good condition and clear of debris.
- The fuel is fresh (> 89 octane: RON+MON/2) and properly mixed at 50:1 with “ISO L-EGD” or “JASO-FD” two-stroke oil.

© 01/22 ECHO Incorporated

1. Turn Hi mixture needle (G) clockwise (CW) until lightly seated. And then turn Hi mixture needle (G) (CCW) 3/4 turns. Turn idle mixture needle (D) (CW) until lightly seated. And then turn idle mixture needle (D) (CCW) 2 5/8 turns.
2. Turn idle adjust screw (E) until the head touches the boss. Then turn idle adjust screw (E) (CW) 2 3/8 turns.
3. Start and run engine for three minutes alternating between wide open throttle (WOT) and idle every five seconds. Adjust idle mixture needle (D) to achieve 2,900 RPM.
4. Adjust Hi mixture needle (G) and achieve 8,200 RPM
5. When final adjustment is completed, the engine should idle, accelerate smoothly, and attain (WOT) per above specification.

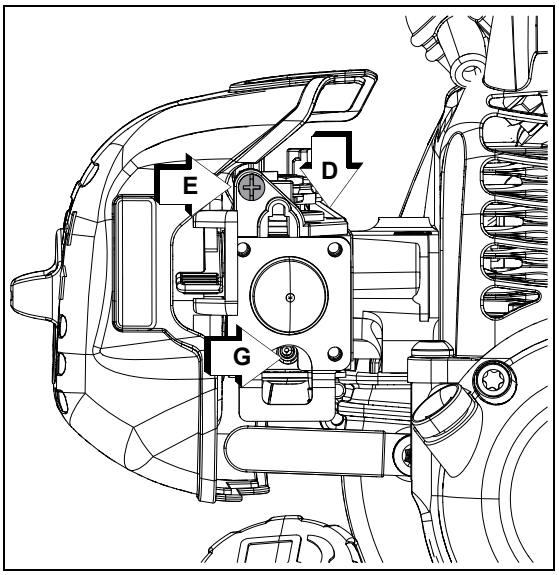

Lubrication

Level 1.

Parts required: Lithium-based grease.

Gear Case

NOTICE

Gear cases without grease plug (A) do not require lubrication.

1. Clean all loose debris from gear case.
2. Remove plug (A) and check level of grease.
3. Add grease if necessary. DO NOT over-fill.

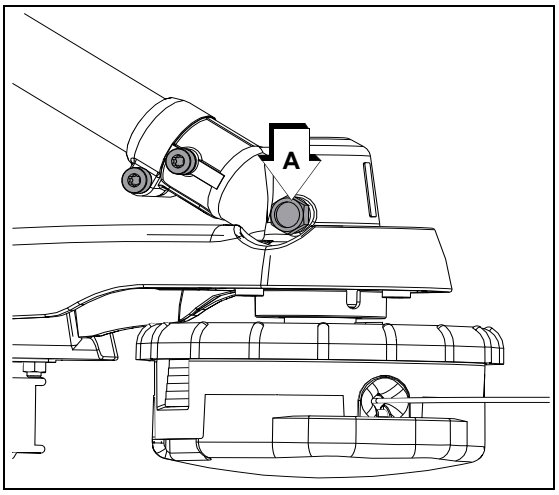

© 01/22 ECHO Incorporated

Drive Shaft (flex cable only)

1. Loosen screw (B) and remove locating screw (C). Pull gear case and shield from drive shaft housing.

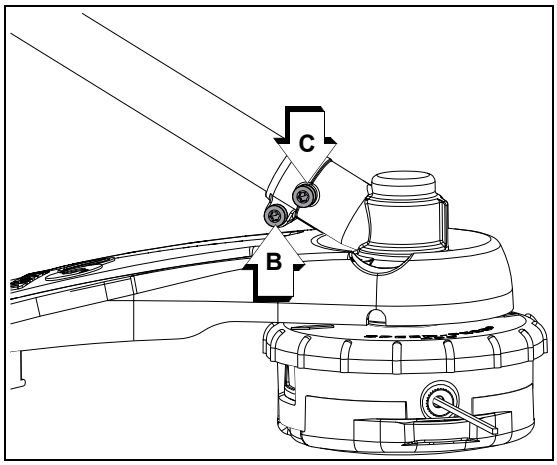

2. Pull flexible cable (D) from the drive shaft housing, wipe clean and re-coat with 15 ml (0.5 oz.) of grease.
3. Slide the flexible cable (D) back in the drive housing. DO NOT get dirt on the flex cable.
4. Install the gear housing and shield assembly.

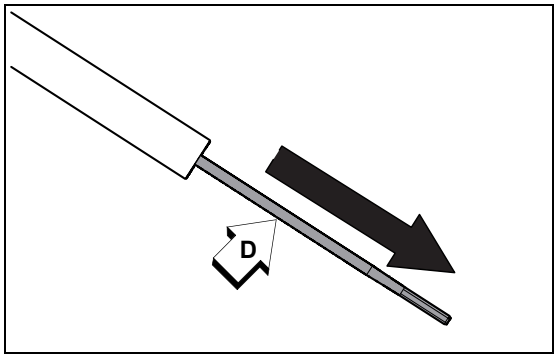

Nylon Line Head Disassembly Instructions

Note: For normal use, Speed Feed® head disassembly is not necessary. However, if circumstances require disassembly, follow these instructions.

1. Press top of locking tabs (A) on both sides of Speed Feed® head to release cover (B) from eyelet carrier (C).
2. Remove cover from eyelet carrier.

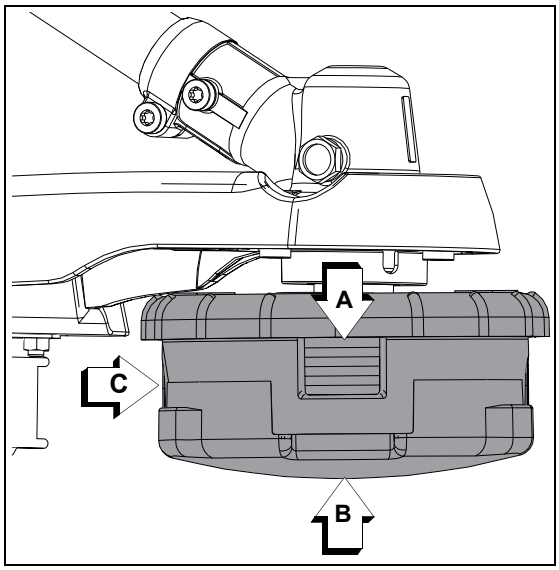

© 01/22 ECHO Incorporated

Nylon Line Replacement

⚠ CAUTION

Wear Gloves or personal injury may result:

- ***Cutoff knife is sharp.***
- ***Gearcase and surrounding area may be hot.***

⚠ WARNING

Never use wire or wire-rope that can break off and become a dangerous "projectile". Serious injury can occur.

1. Cut one piece of line to recommended length.
   2.0 mm (.080) diam. – 6 m (20 ft.)
   2.4 mm (.095) diam. – 6 m (20 ft.)
2. Align arrows on top of knob with openings in eyelets.

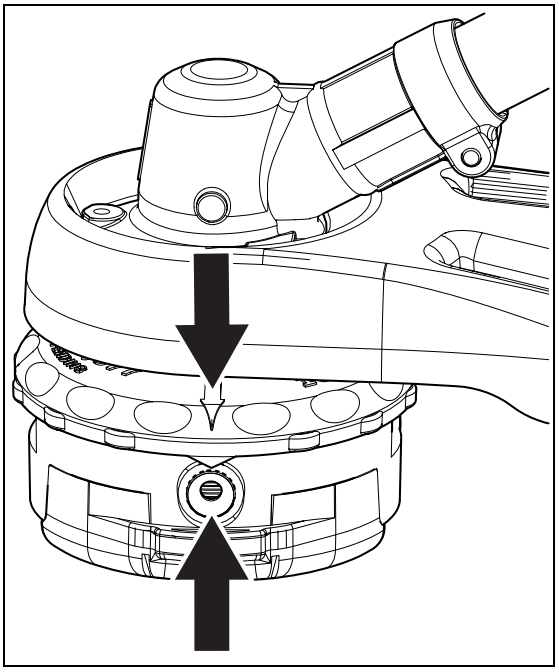

3. Insert one end of trimmer line into an eyelet, and push line equal distance through trimmer head.

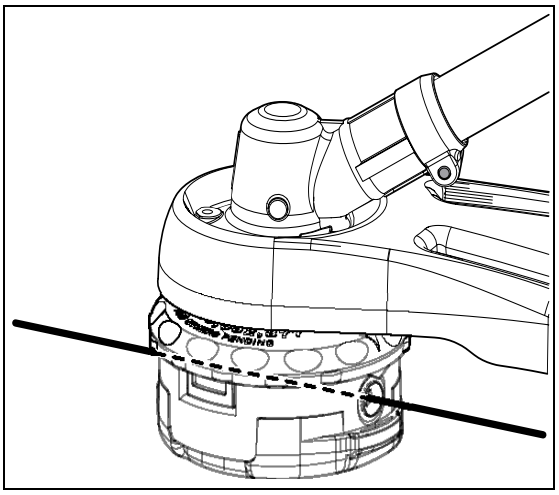

© 01/22 ECHO Incorporated

4. Hold trimmer head while turning knob clockwise to wind line onto spool until about 13 cm (5 in.) of each line remains exposed.

Trimmer head is now fully loaded and ready for operation.

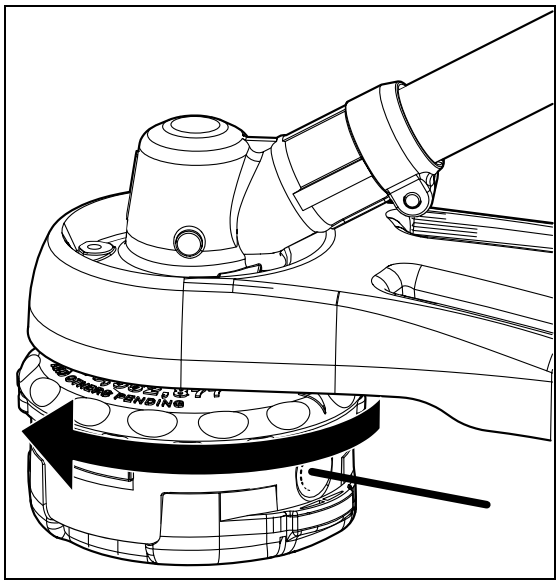

NOTICE

When the wear indicators located at the bottom of the Speed-Feed® head are worn smooth, or if holes appear, replacement of the cover or the entire Speed-Feed® head is required.

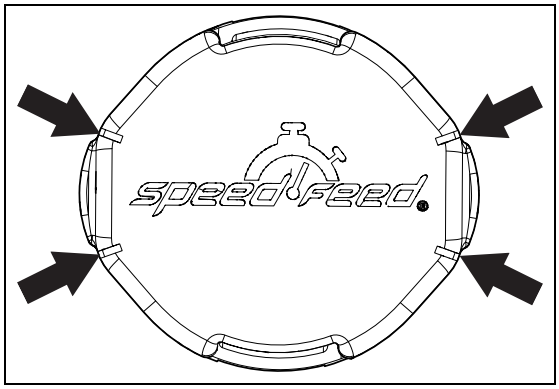

© 01/22 ECHO Incorporated

TROUBLESHOOTING

ENGINE PROBLEM TROUBLESHOOTING CHART				
Problem	**Check**	**Status**	**Cause**	**Remedy**
Engine cranks - starts hard/ doesn't start	Fuel at carburetor	No fuel at carburetor	Fuel strainer clogged Fuel line clogged Carburetor	Clean or replace Clean or replace See your ECHO dealer
	Fuel at cylinder	No fuel at cylinder	Carburetor	See your ECHO dealer
		Muffler wet with fuel	Fuel Mixture too rich	OPEN choke Clean/replace air filter Adjust carburetor See your ECHO dealer
	Spark at end of plug wire	No spark	Stop switch OFF Electrical problem Interlock switch	Turn switch to ON See your ECHO dealer See your ECHO dealer
	Spark at plug	No spark	Spark gap incorrect Covered with carbon Fouled with fuel Plug defective	Adjust to 0.65mm Clean or replace Clean or replace Replace plug
Engine runs, but dies or does not accelerate properly	Air filter	Air filter dirty	Normal wear	Clean or replace
	Fuel filter	Fuel filter dirty	Contaminants/residues in fuel	Replace
	Fuel vent	Fuel vent plugged	Contaminants/residues in fuel	Clean or replace
	Spark Plug	Plug dirty/worn	Normal wear	Clean and adjust or replace
	Carburetor	Improper adjustment	Vibration	Adjust
	Cooling System	Cooling system dirty/plugged	Extended operation in dirty/dusty locations	Clean
	Spark Arrestor Screen	Spark arrestor screen plugged	Normal wear	Replace
Engine does not crank	N/A	N/A	Internal engine problem	See your ECHO dealer

DANGER

Fuel vapors are extremely flammable and may cause fire and/or explosion. Never test for ignition spark by grounding spark plug near cylinder plug hole, otherwise serious personal injury may result.

© 01/22 ECHO Incorporated

STORAGE

WARNING

During operation the muffler or catalytic muffler and surrounding cover become hot. Always keep exhaust area clear of flammable debris during transportation or when storing, otherwise serious property damage or personal injury may result.

Long Term Storage (Over 30 Days)

Do not store your unit for a prolonged period of time (30 days or longer) without performing protective storage maintenance which includes the following:

1. Store unit in a dry, dust free place, out of the reach of children.

DANGER

Do not store in enclosure where fuel fumes may accumulate or reach an open flame or spark.

2. Place the stop switch in the “OFF” position.
3. Remove accumulation of grease, oil, dirt and debris from exterior of unit.
4. Perform all periodic lubrication and services that are required.
5. Tighten all the screws and nuts.
6. Drain fuel tank completely. Press purge bulb six to seven times to remove remaining fuel from carburetor then drain the tank again. Close choke, start and run the engine until it stops due to lack of fuel.
7. Allow engine to cool. Remove the spark plug lead from the spark plug. Remove the spark plug. Pour 7 cc (0.25 oz.) of fresh, clean, two-stroke engine oil into the cylinder through the spark plug hole.
8. Pull the recoil starter handle two to three times to distribute the oil inside the engine.
9. Observe the piston location through the spark plug hole. Pull the recoil handle slowly until the piston reaches the top of its travel and leave it there.
10. Install the spark plug. Connect the spark plug lead to the spark plug.

© 01/22 ECHO Incorporated

SPECIFICATIONS

For units with the following serial numbers:
U34429001001 - U34429999999
U58529001001 - U58529999999

MODEL	SRM-225
Length (without cutter head)	1,795 mm (70.7 in.)
Width	256 mm (10.1 in.)
Height	329 mm (13 in.)
Weight (dry) without cutter head	4.8 kg (10.58 lb.)
Engine Type	Air cooled, two-stroke, single cylinder gasoline engine
Bore	32.2 mm (1.27 in.)
Stroke	26.0 mm (1.02 in.)
Displacement	21.2 cc (1.29 in.^{3})
Exhaust	Spark arrestor muffler or spark arrestor muffler with catalyst
Carburetor	Diaphragm with purge pump
Ignition System	Flywheel magneto, capacitor discharge ignition type
Spark Plug	NGK BPM8Y - Gap 0.65 mm (0.026 in.)
Fuel	Mixed (gasoline and two-stroke oil)
Fuel/Oil Ratio	50:1
Gasoline	89 octane unleaded. Do not use fuel containing methyl alcohol, more than 10% ethyl alcohol or 15% MTBE. Do not use alternative fuels such as E-20 or E85.
Oil	ISO-L-EGD (ISO/CD 13738) and J.A.S.O. M345- FD, two-stroke, air-cooled engine oil.
Fuel Tank Capacity	420 mL (14.2 US fl. oz.)
Starter System	Automatic rewind starter
Clutch	Centrifugal type
Vibration Isolated System	Rubber cushion on engine mount
Operating Rod	25.0 mm (1.0 in.) aluminum tube
Drive Shaft	6.35 mm (0.25 in.) flexible shaft
Gear Case Ratio	1.62:1 Reduction
Rotating Direction	Counterclockwise (viewed from top)
Cutter Head	Speed Feed® 400 LH Nylon line head, Line capacity 6.0 m (20 ft.)
Handle	Front - D-loop type with plastic grip Rear - Plastic grip with throttle trigger and switch
Shoulder Harness	Optional
Idle Speed	3,000 RPM
Clutch Engagement Speed	4,300 RPM
Wide Open Throttle Speed (W.O.T.)	10,000 RPM

© 01/22 ECHO Incorporated

SPECIFICATIONS

For units with the following serial numbers:
U69629001001 - U69629999999

MODEL	SRM-225
Length (without cutter head)	1,783 mm (70.2 in.)
Width	256 mm (10.1 in.)
Height	329 mm (13 in.)
Weight (dry) without cutter head	4.7 kg (10.4 lb.)
Engine Type	Air cooled, two-stroke, single cylinder gasoline engine
Bore	32.2 mm (1.27 in.)
Stroke	26.0 mm (1.02 in.)
Displacement	21.2 cc (1.29 in.^{3})
Exhaust	Spark arrestor muffler or spark arrestor muffler with catalyst
Carburetor	Diaphragm with purge pump
Ignition System	Flywheel magneto, capacitor discharge ignition type
Spark Plug	NGK BPM8Y - Gap 0.65 mm (0.026 in.)
Fuel	Mixed (gasoline and two-stroke oil)
Fuel/Oil Ratio	50:1
Gasoline	89 octane unleaded. Do not use fuel containing methyl alcohol, more than 10% ethyl alcohol or 15% MTBE. Do not use alternative fuels such as E-20 or E85.
Oil	ISO-L-EGD (ISO/CD 13738) and J.A.S.O. M345- FD, two-stroke, air-cooled engine oil.
Fuel Tank Capacity	0.39 L (12.8 US fl. oz.)
Starter System	Automatic rewind starter
Clutch	Centrifugal type
Vibration Isolated System	Rubber cushion on engine mount
Operating Rod	25.0 mm (1.0 in.) aluminum tube
Drive Shaft	6.0 mm (0.25 in.) flexible shaft
Gear Case Ratio	1.62:1 Reduction
Rotating Direction	Counterclockwise (viewed from top)
Cutter Head	Speed Feed® 400 LH Nylon line head, Line capacity 6.0 m (20 ft.)
Handle	Front - D-loop type with plastic grip Rear - Plastic grip with throttle trigger and switch
Shoulder Harness	Optional
Idle Speed	3,000 RPM
Clutch Engagement Speed	4,300 RPM
Wide Open Throttle Speed (W.O.T.)	10,000 RPM

© 01/22 ECHO Incorporated

U34429001001 - U34429999999
U58529001001 - U58529999999
U69629001001 - U69629999999

ECHO, INCORPORATED
400 Oakwood Road
Lake Zurich, IL 60047
www.echo-usa.com