Chipper/Shredder/Vacuum

Operator's Manual

MODELS: **CSV-5 (Walk Behind)**
CSV-5S (Self Propelled)
CSV-8S (Self Propelled)

WARNING ⚠ DANGER

Read rules for safe operation and instructions carefully. ECHO provides an Operator's Manual and an Engine Operators Manual. Both must be read and understood for proper and safe operations.

For your nearest ECHO Dealer, call 1-800-432-ECHO (3246)

INTRODUCTION

Welcome to the ECHO family. This ECHO product was designed and manufactured to provide long life and on-the-job-dependability. Read and understand this manual and the important Safety Messages it contains.

CAUTION

Read rules for safe operation and instructions carefully. ECHO provides an Operators Manual and an Engine Manufacturer's Operators Manual that must be read and understood for proper and safe operation.

The Operator's Manual --
contains important SAFETY information plus, specifications and information for operation, starting, stopping, maintenance, storage and assembly of the Unit. Also included is the Engine Manufacturer's Operator's Manual and Transmission Warranty Statement which must also be read and understood.

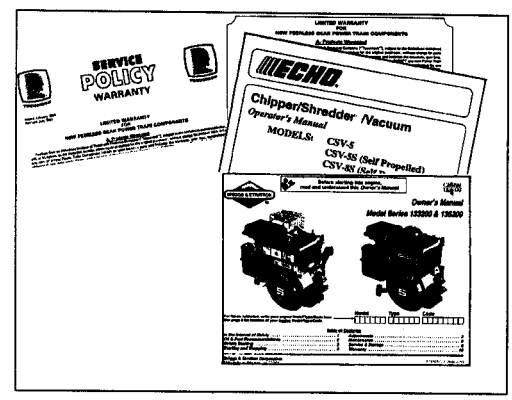

Operators and Parts Manuals --
are available for purchase from your ECHO dealer or directly from ECHO. See ordering instructions at the end of this manual.

Specifications, descriptions and illustrative material in this literature are as accurate as known at the time of publication, but are subject to change without notice. Illustrations may include optional equipment and accessories, and may not include all standard equipment.

WARNING

The engine exhaust from this product contains chemicals known to the State of California to cause cancer, birth defects or other reproductive harm.

Copyright © 1995 ECHO, INCORPORATED

TABLE OF CONTENTS

INTRODUCTION 2
Safety Symbols 3
Operator Safety 4
PRE-OPERATION
Equipment Check 5
Determine Operation Area 6
Operation Safety Tips 6
Description 9
ASSEMBLY
Install Front Wheels 12
Install Rear Wheels 12
Install Upper Handle Bar 13
Install Wheel Guard Kit 13
Install Traction Control 14
Install Height Control 14
Install Shredding Hopper 16
Install Discharge Elbow & Collection Bag 16
Prepare Engine for Operation 16
OPERATION
Stationary Shredding/Chipping 18
Mobile-Vacuuming Leaves 19
Mobile-Blowing 20
MAINTENANCE
Cleaning 21
Lubrication 22
Replacing/Sharpening Chipper Knives 23
Replacing Hammers 25
Drive Belt Replacement 26
Storage 28
Servicing Information 29
SPECIFICATIONS 30
DECALS 31

SAFETY SYMBOLS

Throughout this manual and on the product itself, you will find safety alerts and helpful, informational messages preceded by symbols or key words. The following is an explanation of those symbols and key words and what they mean to you.

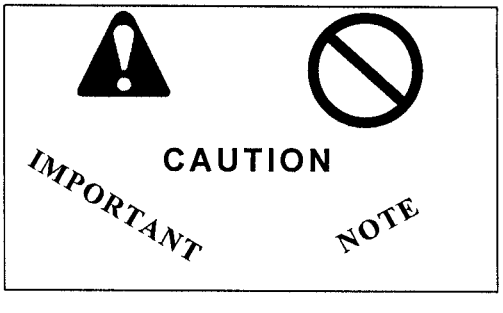

This symbol accompanied by the words **WARNING, DANGER** or **CAUTION** calls attention to an act or condition that can lead to serious personal injury to operator and bystanders.

The circle with the slash symbol means whatever is shown within the circle is prohibited.

IMPORTANT The enclosed message provides information necessary for the protection of the unit.

NOTE This enclosed message provides tips for use, **care** and maintenance of the unit.

Operator Safety

CAUTION

Operators risk injuries to themselves and others if the unit is used improperly and or safety precautions are not followed. Proper clothing and safety gear must be worn when operating the unit.

Eye Protection --

Eye protection goggles that meet ANSI Z87.1 requirements were included with your unit. Wear these goggles whenever you operate the unit.

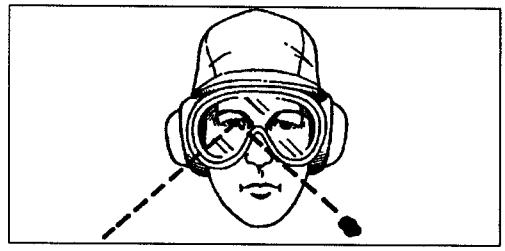

Hearing Protection --

Always wear hearing protection when using this unit. Noise is created by the engine and the internal workings of the machine as it chips and shreds the material. Hearing protection devices are available from your ECHO Dealer.

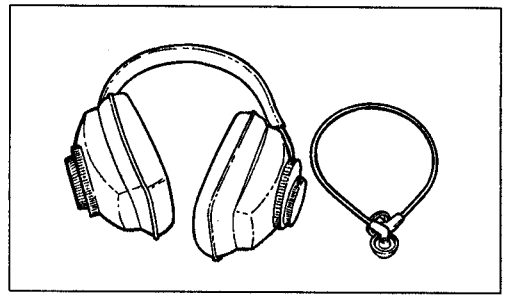

Proper Clothing --

Wear snug fitting, durable clothing;
- -Pants should have long legs, **shirts longsleeves.**
- -DO NOT WEAR SHORTS,
- -DO NOT WEAR TIES, SCARVES, JEWELRY.

Wear sturdy work shoes with non-skid soles;
- -DO NOT WEAR OPEN TOE SHOES,
- -DO NOT OPERATE UNIT BAREFOOTED.

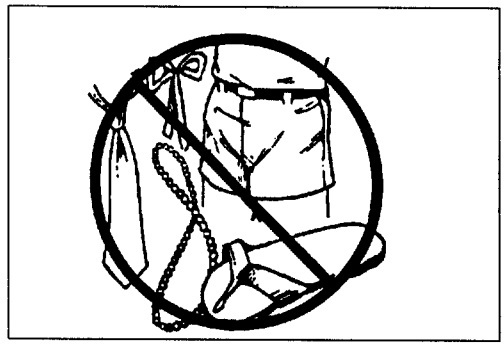

Hot Humid Weather --

Heavy protective clothing can increase operator fatigue which may lead to heat stroke. Schedule heavy work for early morning or late afternoon hours when temperatures are cool.

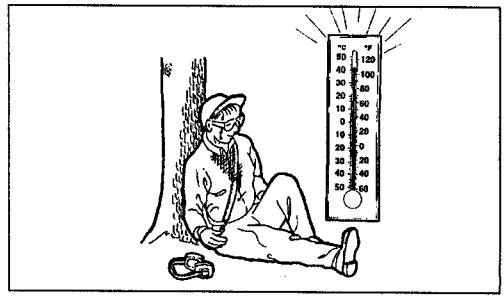

HANDLING FUEL

CAUTION

Fuel is **VERY** flammable. Use extreme care when storing or handling.
- Use an approved fuel container.
- DO NOT smoke near fuel.
- DO NOT allow flames or sparks near fuel.
- Fuel tanks/cans may be under pressure. Always loosen fuel caps slowly allowing pressure to equalize.
- NEVER refuel a unit when the engine is HOT!
- NEVER refuel a unit with the engine running.
- DO NOT fill fuel tanks indoors. ALWAYS fill fuel tanks outdoors over bare ground.

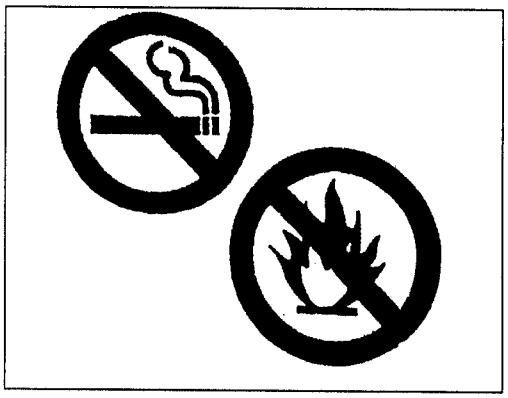

After Refueling;
- Wipe any spilled fuel from the unit.
- Move at least 10 ft. (3 M) from refueling location before starting.

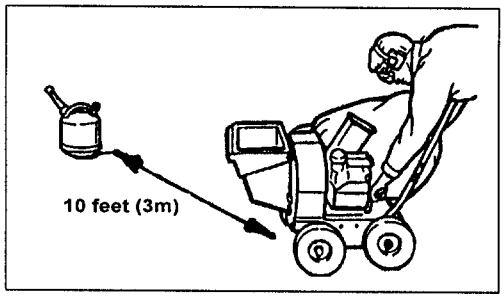

IMPORTANT This product is powered by a 4 (four) Stroke Engine. DO NOT mix oil and fuel together. Refer to Engine Manufacturer's Operators Manual for fueling instructions.

Physical Condition --

Your judgment and physical dexterity may not be good:
-if you are sick,
-if you are taking medication,
-if you have taken alcohol or drugs.
Operate unit only if you are physically and mentally well.

Equipment Check —

Before operation a complete check of the unit must be performed;
- Check unit for loose/missing nuts, bolts and screws. Tighten and/or replace as needed.

CAUTION

Inspect fuel lines, tank and area around carburetor for fuel leaks. DO NOT operate unit if leaks are found.

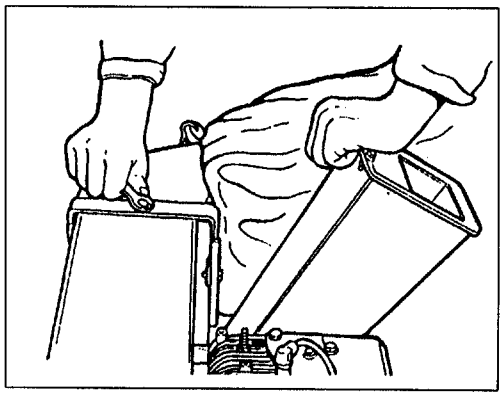

- Inspect belt guard (A), transmission cover (B) and belt (self propelled unit only). Belt guard **and transmission cover must** be in place. Do not operate machine if belt guard is damaged or missing. Do not operate machine if transmission cover is damaged or missing.

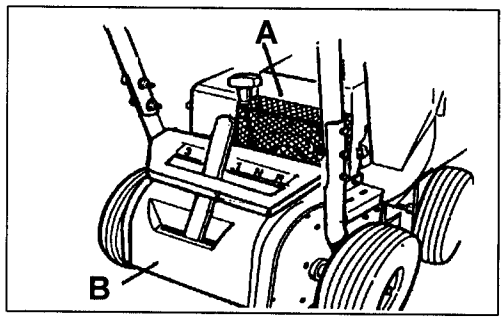

- Hopper Baffle (A), Chipper Chute Guard (B) and Grate Bar (located inside discharge elbow) **MUST** be in place and in good repair. **NEVER** operate unit if any are damaged or missing.

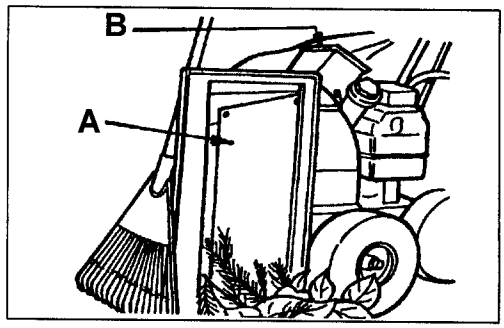

Determine Operation Area —

Vacuuming - Walk Behind

- Review the area to be vacuumed. Look for hazards that could contribute to unsafe conditions. Loose stones, toys, wire and other objects that may be drawn into the unit should be removed. Steep slopes and uneven terrain should be avoided.

- Spectators and fellow workers must be warned and children and animals prevented from coming nearer than 50 ft. (15m) while the unit is in use.

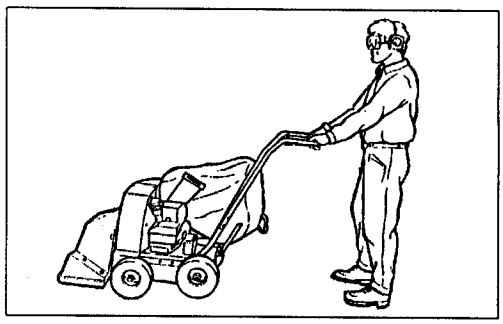

Shredding/Chipping Stationary

- For stationary use, this machine should be operated only on a solid, flat, level surface. Select the area of operation carefully. Avoid areas where spectators, fellow workers, children or animals are common.

- If used without the Collection Bag, position the machine with the Optional, Discharge Chute Extension aimed into a confined, protected area.

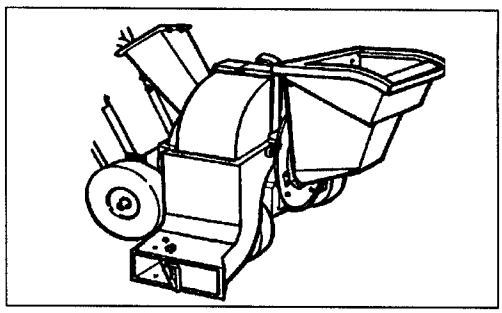

Operation Safety —

- Do not allow children to operate this equipment.

- Before starting the unit, equip yourself and any other person working within the 50 ft. (15m) Safety Zone with the proper Protective Equipment and clothing.

- Know where the engine controls are and how to use them. Know and practice an Emergency Shutdown Procedure. See Engine Manufacturer's Operators Manual for specific information.

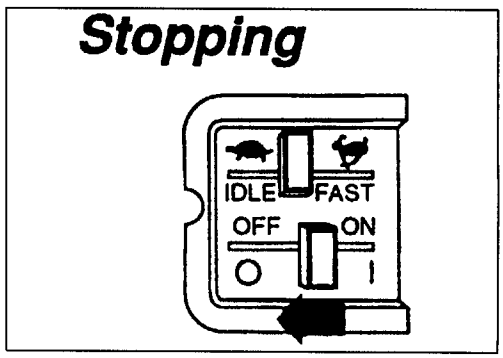

⚠ CAUTION

Under normal shut down circumstances (engine shut down and stopped), the Shredding/Chipping Rotor will continue to turn for approximately twenty (20) seconds. Not waiting for rotor to stop may cause serious personal injury.

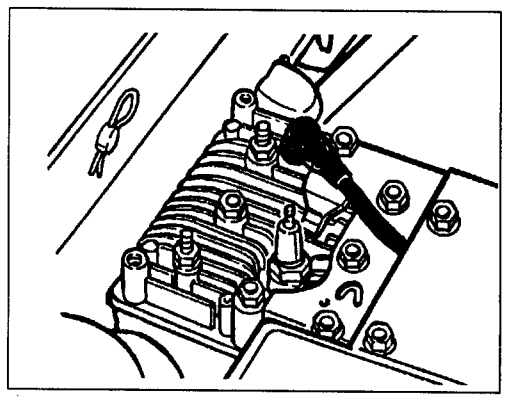

- NEVER place your hands, any part of your body or clothing inside the Shredding Hopper, Discharge Elbow or Chipper Chute unless the engine is shut off, the spark plug wire is disconnected and the wire is moved away from the plug to prevent accidental starting, and the rotor has come to a complete stop.

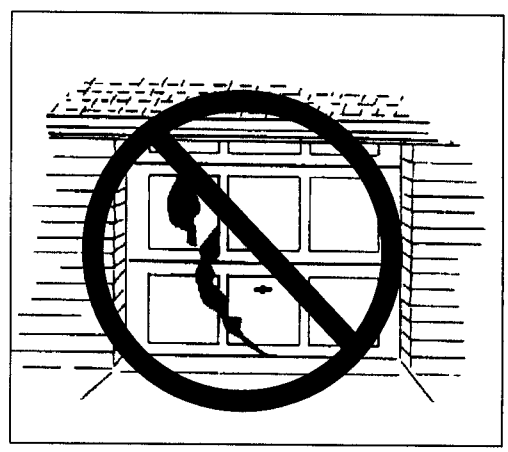

- Do Not run engine in an enclosed area. Exhaust fumes contain carbon monoxide which is a colorless, odor free, tasteless deadly Poison.
- Stand back and to the side of the Shredding Hopper, Chipping Chute and Discharge Elbow when material is placed in the machine for processing.
- Do not over reach when using this unit. Always maintain proper balance and footing at all times.

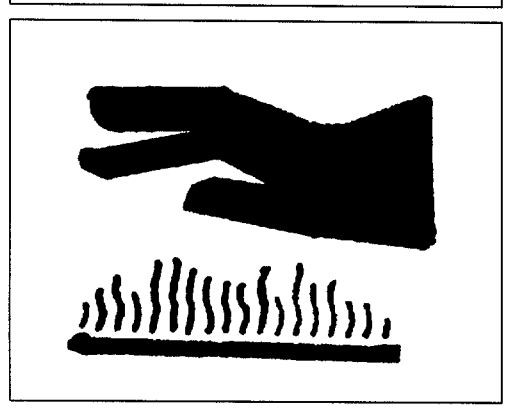

- During operation, the complete unit, especially the muffler and engine become very hot, too hot to touch. Avoid contact during and immediately after operation.
- Watch for and remove any material that may accumulate on the muffler or build up in the Discharge Chute during operation.

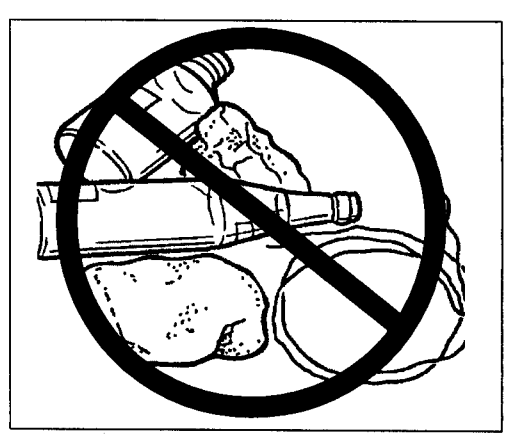

- DO NOT move machine with the engine running unless you are Vacuuming or Blowing.
- Material fed into this machine must be shreddable. Metal, rocks, bottles or other non-shreddable material WILL damage the machine and can result in serious personal injury.
- If non-shreddable material is fed into the machine, the machine jams or makes unusual noise or vibrates, IMMEDIATELY STOP the unit. Disconnect the spark plug and move it away from the spark plug to prevent accidental starting. Refer to Removing a Jam in the Maintenance Section.

- Before starting your unit, disconnect the spark plug wire and move it away from the spark plug to prevent accidental starting. Inspect the Shredding Hopper, Shredding Chamber, Chipper Chute and Discharge Elbow. Items (garden tools, gloves etc.) left in these areas will either jam the machine or be destroyed.

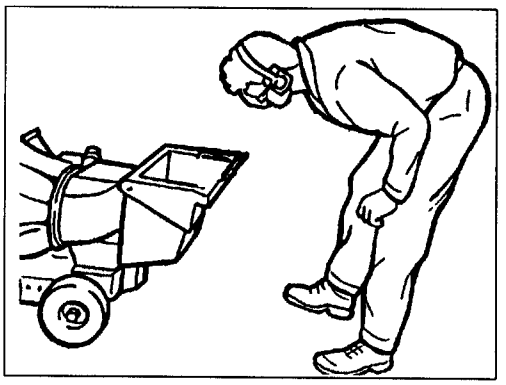

Vibration and Cold --

It is believed that a condition called Raynaud's Phenomenon, which affects the fingers of certain individuals may be brought about by exposure to vibration and cold. Exposure to vibration and cold may cause tingling and burning sensations followed by loss of color and numbness in the fingers. The following precautions are strongly recommended because the minimum exposure which might trigger the ailment is unknown.

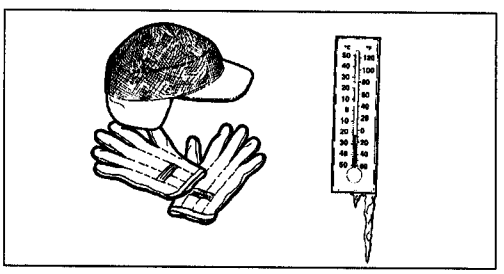

- Keep your body warm, especially the head, neck, feet, ankles, hands and wrists.
- Maintain good blood circulation by performing vigorous arm exercises during frequent work breaks and also by not smoking.
- Limit the hours of operation. Try to fill each day with jobs where operating this product or other hand-held power equipment is not required.
- If you experience discomfort, redness and swelling of the fingers followed by whitening and loss of feeling, consult your physician before further exposing yourself to cold and vibration.

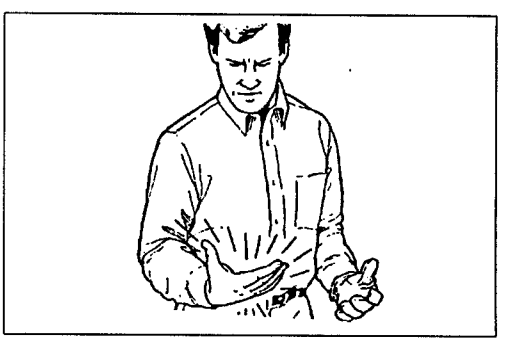

Repetitive Stress Injuries --

It is believed that overusing the muscles and tendons of the fingers, hands, arms and shoulders may cause soreness, swelling, numbness, weakness and extreme pain in those areas. Certain repetitive hand activities may put you at a high risk for developing Repetitive Stress Injury (RSI). An extreme RSI condition is Carpal Tunnel Syndrome (CTS), which could occur when your wrist swells and squeezes a vital nerve that runs through the area. Some believe that prolonged exposure to vibration may contribute to CTS. CTS can cause severe pain for months or even years. To reduce the risk of RSI/ CTS, do the following:

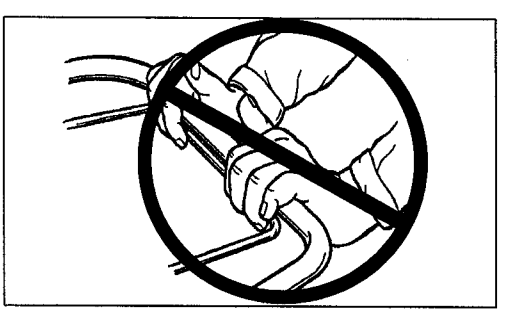

- Avoid using your wrist in a bent, extended or twisted position. Instead try to maintain a straight wrist position. Also, when grasping, use your whole hand, not just the thumb and index finger. Take periodic breaks to minimize repetition and rest your hands.
- Reduce the speed and force in which you do the repetitive movement.
- Do exercises to strengthen the hand and arm muscles.
- See a doctor if you feel tingling, numbness or pain in the fingers, hands, wrists or arms. The sooner RSI/CTS is diagnosed, the more likely permanent nerve and muscle damage can be prevented.

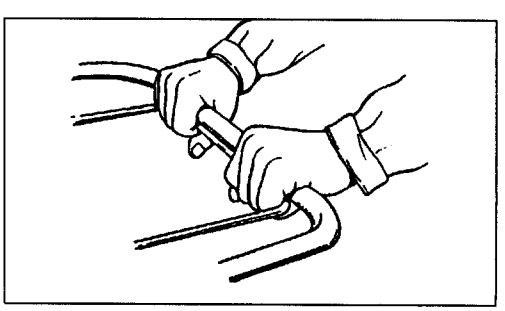

DESCRIPTION

After opening the carton, check for damage. Immediately notify your retailer or ECHO Dealer of damaged or missing parts. Use the contents list to check for missing parts.

Contents List

[ ]	QTY	DESCRIPTION
[ ]	1	Base Unit Assembly
[ ]	1	Hopper
[ ]	1	Discharge Elbow
[ ]	1	Upper Handlebar Assembly
[ ]	2	Front Wheels
[ ]	2	Rear Wheels
[ ]	1	Collection Bag
[ ]	1	Operators Manual
[ ]	1	Limited Warranty Statement
[ ]	1	Warranty Registration Card
[ ]	1	Safety Goggles
[ ]	1	Engine Manufacturer's Operators Manual
[ ]	1	Transmission Warranty Statement

[ ] 1 Parts Bag

	CSV-5	CSV-5S CSV-8S	
- [ ]	4	6	5/16"-18 x 1 3/4" Hex Hd Bolt NC
- [ ]	3	3	5/16" ID Flat Washers
- [ ]	4	6	5/16"-18 Nylock Nuts NC
- [ ]	3	3	5/16"-18 x 3/4" Hex Hd Bolt NC
- [ ]	4	4	5/8" ID Flat Washers
- [ ]	2	2	5/8" -11 x 4 -1/2" Hex Hd Bolts NC
- [ ]	0	2	1/4" Clevis Pins w/ Spring Pins
- [ ]	1	1	8 - 32 x 1 3/4" Rd Hd Machine Screw
- [ ]	1	1	8 - 32 Locknut
- [ ]	1	1	6 - 32 Locknut
- [ ]	2	0	1/8 x 1-1/4" Cotter Pin
- [ ]	0	1	1/4" Flat Washer
- [ ]	0	1	1/4 - 28 X 3/4" Cap Screw
- [ ]	0	1	Double D Washer
- [ ]	0	6	10 - 24 x 3/8" Button Socket Hd Capscrew
- [ ]	1	1	#6 Flatwasher

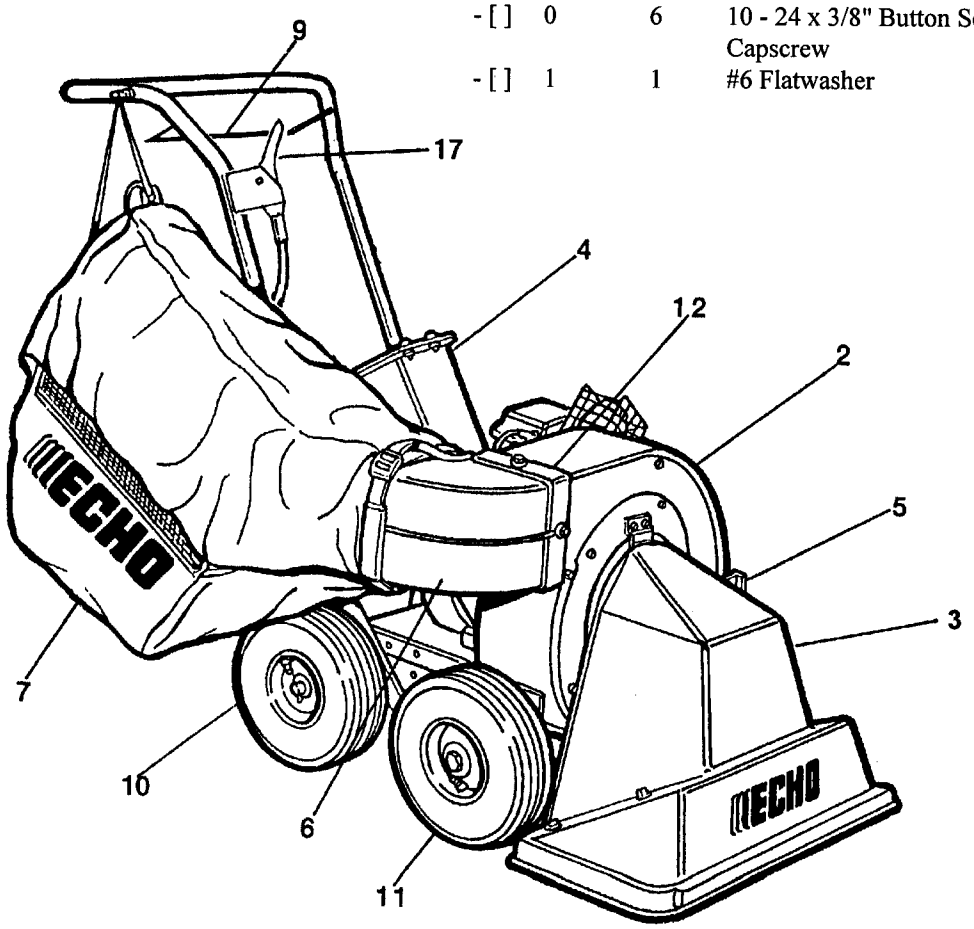

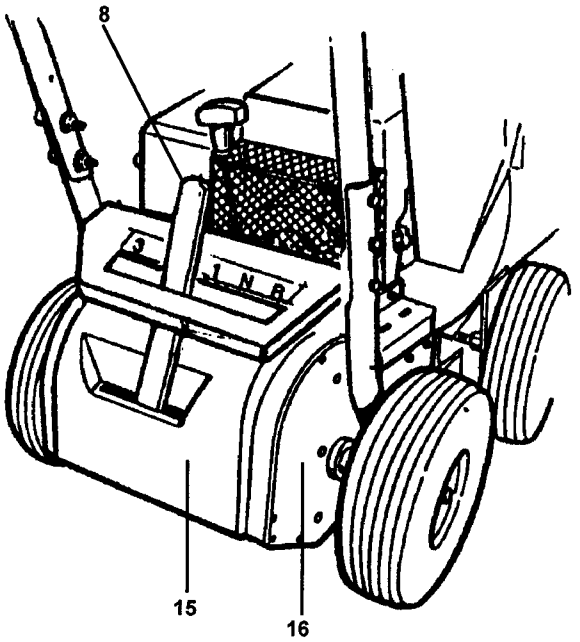
8
15
16

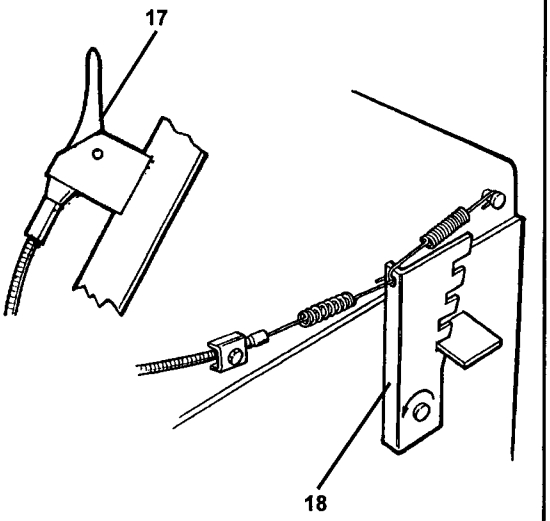
17
18

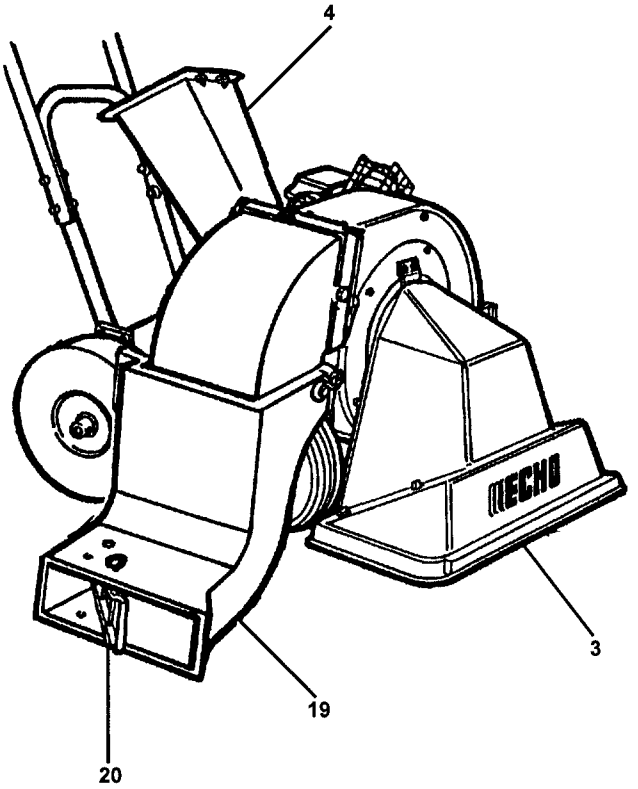
4
3
19
20

1
ECHO
Chipper/Shredder /Vacuum
Operator's Manual
MODELS:
CSV-5
CSV-5S (Self Propelled)
CSV-8S (Self Propelled)

1. OPERATORS MANUALS - There are two Operators Manuals included, one for the Chipper/Shredder/Vacuum and one for the engine. Read both before operation and keep in a safe place for future reference.

2. BASE UNIT ASSEMBLY - Factory assembled unit to which wheels, handle, shredding hopper, discharge elbow and collection bag are installed.

3. SHREDDING HOPPER - Mounts to the front of the shredding housing and swivels providing three operating positions. Contains a safety baffle that must be in place at all times.
   A. Upright, for manual feeding of material. Stationary Operation.
   B. Vertical, for raking leaves directly next to hopper allowing vacuum action to draw material in for shredding. Stationary Operation only.
   C. Down, for Walk Behind vacuuming of leaves. Mobile Operation.

4. CHIPPING CHUTE - Directs material to be chipped against the back of the Rotor Assembly where the Chipper Knives are located. Contains a safety baffle that MUST be in place at all times.

5. HOPPER LATCH - Spring loaded mechanism that engages notches in flange of Shredding Hopper. Holds Hopper in either the Upright or Down position. Pull latch out and turn hopper to desired position. Release latch. Check that latch engages notch.

6. DISCHARGE ELBOW - Directs shredded/chipped material into Collection Bag or through Optional "Discharge Chute Extension" (19).

7. COLLECTION BAG - Mounts to the discharge elbow and "J" bolt hook on handle. A large panel of open mesh allows air to pass through the bag while retaining the shredded material.

8. SHIFT LEVER - Self propelled models only. Shifts transmission from Neutral, Reverse and three Forward speeds.

9. BAIL - Self propelled models only. Lifting up on the bail tightens the drive belt propelling the unit.

10. REAR WHEELS - Serve as drive wheels on self propelled models.

11. FRONT WHEELS - Free wheeling on all models. Grease fittings contained inside both wheels.

12. BAR GRATE - A heavy duty weldment located in the outlet of the shredding chamber through which all shredded and chipped material must pass. The grate can be removed for cleaning and is held in place with two heavy duty clevis pins which are retained by spring pins.

13. HAMMERS - (Not Illustrated) There are three sets of heavy, flail type hammers mounted on the Rotor. As the Rotor turns, centrifugal force causes the hammers to extend away from the rotor shredding the material in the chamber. The Hammers do not require sharpening and are replaceable when worn.

14. CHIPPER KNIFE - (Not Illustrated) Two Knives mounted to the back of the Rotor chip material fed through the Chipper Chute. The knives can be re-sharpened and are replaceable.

15. TRANSMISSION - Receives power from the engine via a belt and transmits power to the differential/rear axle with a roller chain. There are three (3) forward speeds, one (1) reverse speed and a neutral position.

16. DIFFERENTIAL - Located on the rear axle. Applies power to both rear wheels equally when traveling in a straight line. Allows wheel on the inside of a turn to turn slower for easy turning.

17. HEIGHT ADJUSTMENT THUMB LEVER - Located on the right side of the handle bar. Depressing the lever releases the Height Adjustment Index Plate (18) located on each side of the lower frame just behind the front wheels. Pushing down or lifting up on the handle bar raises or lowers the front of the unit.

18. HEIGHT ADJUSTMENT INDEX PLATE - Notched plate that is held engaged with the height adjustment tab on the side of the frame by a spring. Depressing the Height Adjustment Thumb Lever releases the Index Plate allowing up or down height adjustment.

19. DISCHARGE CHUTE EXTENSION (OPTIONAL) - MUST be used when the Collection Bag is not used. For BLOWER use or when shredded/chipped material is to be broadcast during mobile operation or directed into a confined collection area during stationary operation.

20. DEFLECTOR PLATE - Directs flow of air during blowing.

ASSEMBLY

IMPORTANT The engine is shipped from the factory **WITHOUT OIL!** Oil must be added to the engine before starting. Engine service is the last step prior to initial start-up.

Tools Required: 3/8", 1/2" and 15/16" open end wrenches.

Install Front Wheels —

Parts Required: Two (2) wheel assemblies with short hubs, two (2) 5/8" - 11 x 4 1/2" Hex Hd Bolts, and four (4) 5/8" ID Flat Washers. Tire pressure should be checked prior to wheel, tire assembly installation. Tire pressure for all models is 30 psi.

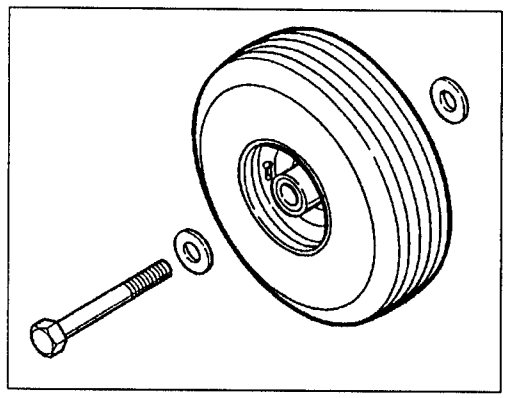

1. Place one sheet of the cardboard packing material in front of the unit and tip the unit forward on the cardboard .

2. Place one flat washer on each bolt. Install bolt from the side of the wheel with the air stem (the grease fitting goes to the inside). Place an additional washer on bolt and thread into the height adjuster cradle. Do not over tighten, bolt wheel should turn freely.

Install Rear Wheels —

Parts Required: Two (2) wheel assemblies with long hub, two (2) clevis pins and two (2) spring pins, Self Propelled Unit. Walk behind also requires an axle and uses two (2) 1/8 x 1 1/4" Cotter Pins in place of the Clevis pins.

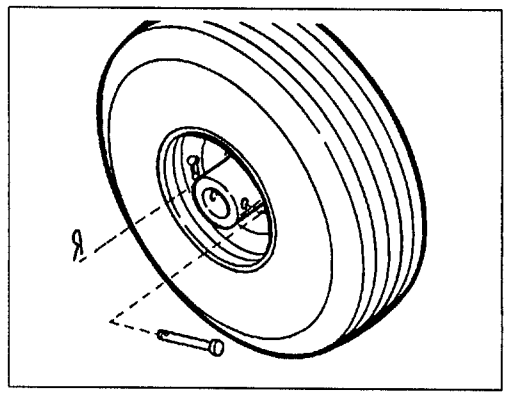

1. (Walk Behind Only) - Slide axle through the holes in the rear of the engine tray.

2. Slide wheels on axle and align hole in axle with hole in wheel hub.

3. Insert clevis pin and secure with spring pin on CSV-5S and CSV-8S model or cotterpins on the CSV-5 model.

4. Pivot unit back on its' wheels.

Install Wheel Guard Kit —(CSV-5S, CSV-8S)

Parts in Kit include: Guard, Two (2) 3/8-16x3/4 self tapping bolts.

To install wheel guard kit, place the guard over the right rear tire, as seen from operator's position. Align the guard (A) mounting holes with the holes (B) provided in the right hand side plate. Secure the guard with the two (2) 3/8-16x3/4 self tapping bolts (C) included in the kit.

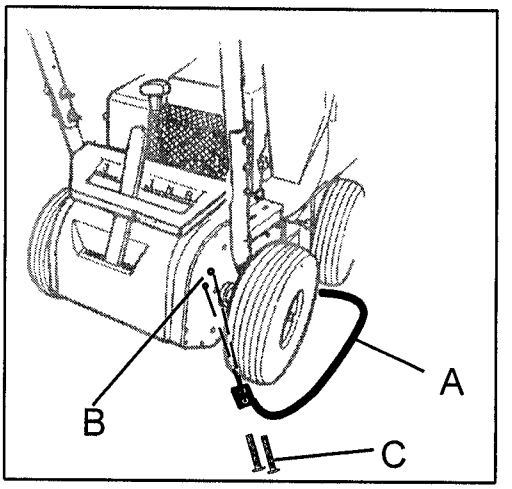

Install Upper Handle Bar —*Self Propelled Unit*

Parts Required: Handle Bar Assembly, Shift Lever Guide, six (6) 5/16" x 1 3/4" Hex Hd Bolts, six (6) 5/16" Lock Nuts, two (2) 8 - 32 x 1 3/4" Rd Hd Machine Screws, two (2) 8 - 32 Locknuts.

1. Use the lower or upper set of holes in the lower handlebar depending on operator height and comfort. If the lower set of holes is used, only four (4) of the six (6) hex head bolts and nuts will be used.

2. Install the Shift Lever Guide (A) in the bottom holes.

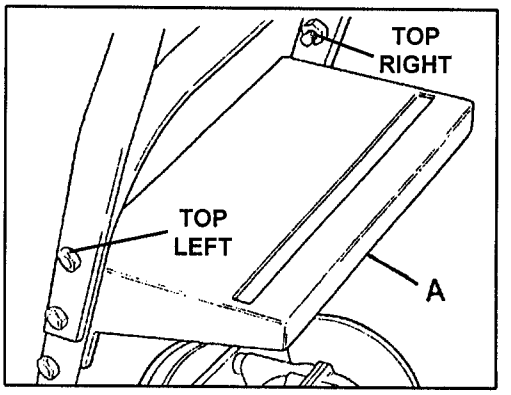

> **NOTE** The CSV-8S is supplied with four (4) 5/16" x 1-3/4 Hex Hd bolts and two (2) 5/16" X 1-1/2 Hex Hd Bolts. When installing the handle bar onto the upper set of holes in lower handle bar use the two (2) 1-1/2" length bolts in the top left and top right holes to assure clearance between the bolt and fuel tank.

Install Height Adjuster Trigger

3. Uncoil the Height Adjuster Cable, use care not to twist cable.

4. Attach the trigger assembly to the top of the right handle. Mount trigger with preassembled 6-32 x 2 RD HD Machine Screw (B). Assemble #6 flatwasher and 6-32 locknut and tighten.

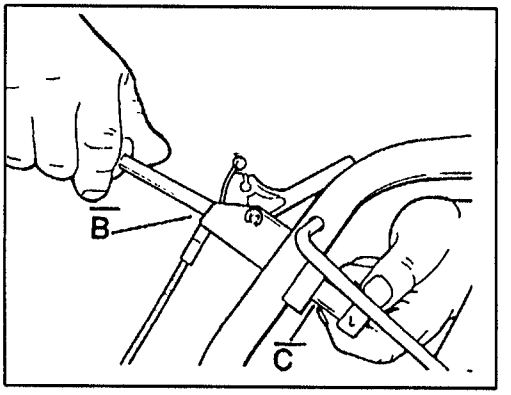

5. Check height adjuster cable operation. Depress height adjuster trigger (A) and push down on rear handle bar. The cable should pull the height adjustment index plate (B) clear of the frame tab (C) allowing the unit to pivot to the alternate height notches in the index plate (B). When the height adjustor trigger (A) is released the index plate notch should fully engage the frame tab (C). If index plate (B) does not release from the frame tab or engage the frame tab (C), adjust the cable as follows:

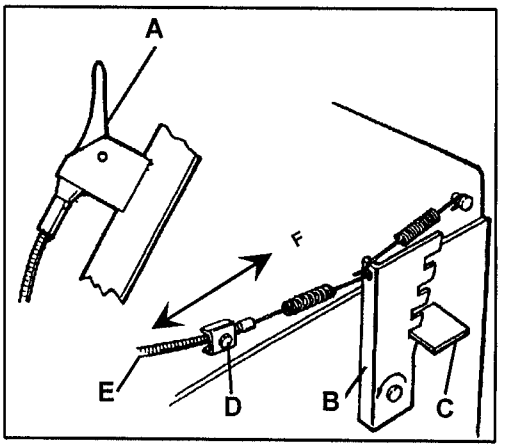

- Loosen cable clamp screw (D) using a 5/32" allen wrench. Widen clamp with screw driver to allow free cable movement.
- To adjust for more engagement move cable (E) forward as required to allow index plate (B) to fully engage frame tab (C).
- To adjust for disengagement move cable (E) backward as required to allow index plate (B) to disengage frame tab (C).
- Tighten clamp screw (D).

NOTE It may be necessary to disconnect the spring at the other end of the height adjustment cable to gain enough slack to reattach the inner wire.

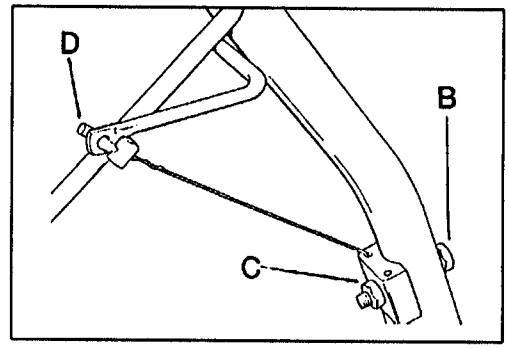

Install Traction Drive Cable

6. Uncoil the Traction Drive Cable, use care not to twist cable.

7. Connect "Z" End (D) to hole in bail.

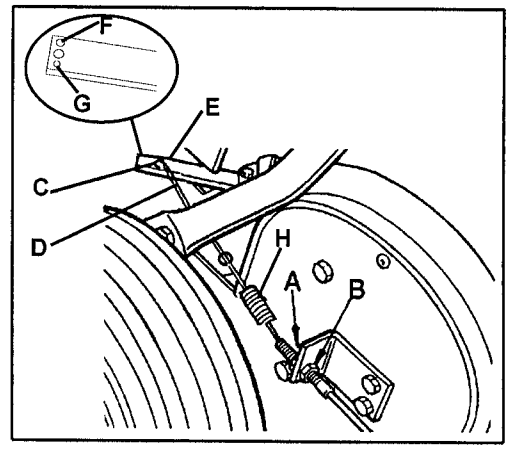

8. Attach mounting bracket to the handle bar using one 8 - 32 x 1 3/4" Rd Hd Machine Screw (B) and one 8 - 32 Locknut (C).

9. Install the "Z" end of the idler pulley engagement cable (D) to the center hole of the clutch lever (E).

10. Install the return spring (H) located at the end of the traction drive cable to the idler pulley engagement cable (D).

11. The threaded cable end will have two (2) lockwashers and two (2) nuts. Thread the inner nut to the halfway position on the threads. Unscrew the outer nut with one lockwasher completely off the threads. Insert the end of the threaded cable sleeve into the lower cable mounting bracket. Reinstall the outer lockwasher and nut.

NOTE A lock washer and nut (A&B) should be on each side of the lower mounting bracket as shown.

12. Secure the two nuts against the mounting bracket using two 1/2 inch open end wrenches. After unit is completely assembled, check belt tension as outlined in maintenance section under "Checking Belt Tension - Level 1". If belt adjustment is necessary follow "Adjusting Belt Tension - Level 2" in maintenance section of operator's manual.

NOTE If no adjustment on cable end remains, remove "Z" end of pulley engagement cable (C) from clutch lever (E). Move cable end "Z" to forward hole (F) for increased tension or rear hole (G) to decrease tension.

Install Upper Handle Bar - Walk Behind Unit

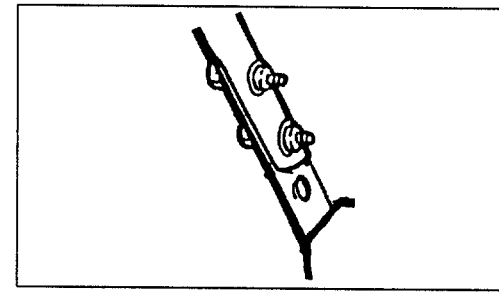

Parts Required: Handle Bar Assembly, four (4) 5/16" x 1 3/4" Hex Hd Bolts, four (4) 5/16/" locknuts.

1. Use the lower or upper set of holes in the lower handlebar depending on operator height and comfort.

Install Height Adjuster Trigger

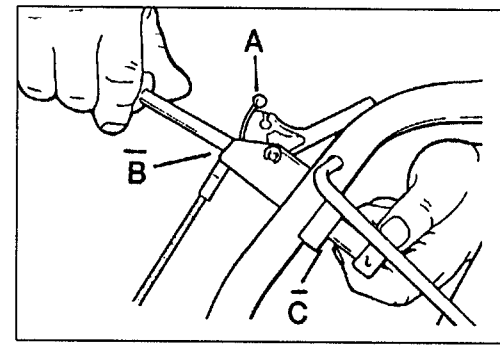

2. Uncoil the Height Adjuster Cable, use care not to twist cable.

3. Remove the Inner Wire (A) from the trigger to gain access to the mounting hole. Attach the trigger assembly to the top of the right handle using one 8 - 32 x 1 3/4" Rd Hd Machine Screw (B) and one 8 - 32 Locknut (C).

4. Reattach the inner wire and test.

> **NOTE** It may be necessary to disconnect the spring at the other end of the height adjustment cable to gain enough slack to reattach the inner wire.

Transmission Lever and Cover - Self Propelled Only

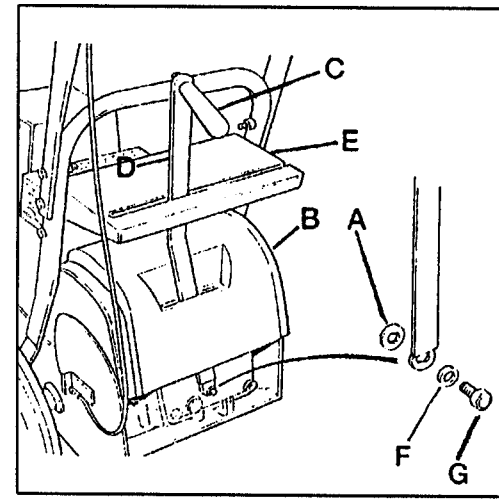

Parts Required: Shift lever, Transmission Cover, one (1) double "D" Washer, one (1) 1/4" Flat Washer, one (1) 1/4-28 x 3/4" Hex Hd Capscrew, six (6) 10-24 x 3/8" Button Hd Hex Socket Capscrews.

1. Install Double D Washer (A) on transmission shift shaft. Place Transmission Cover (B) over transmission with slot to rear, DO NOT FASTEN.

2. With the Handle (C) to the rear, slide the Shift Lever (D) through the Shift Lever Guide (E) and the slot in the Transmission Cover (B).

3. Place the Shift Lever (D) on the transmission shaft, use the 1/4" Flat Washer (F) and 1/4-28 x 3/4" Capscrews (6) to secure the shift lever.

4. Lower the Transmission cover (B) over the transmission and secure with the six (6) Button Hd Hex Socket Capscrews (H).

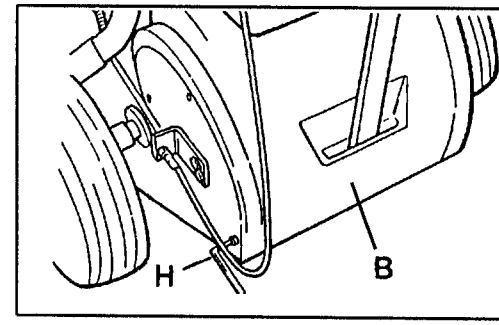

Install Shredding Hopper —

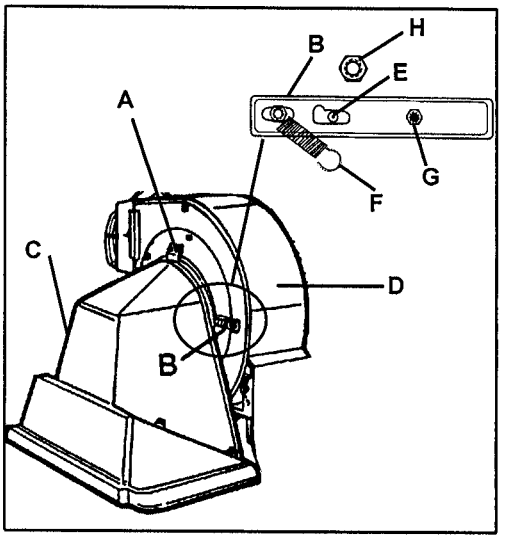

Parts Required: Shredding Hopper.

1. Installing Shredding Hopper (C) reposition Hopper Latch (B) to Base Unit Assembly (D).
2. Position Hopper Latch (B) over bolt (E).
3. Use one (1) 5/16-18 Nylock Nut (H) and tighten fully clockwise, then turn 5/16-18 Nylock Nut (H) one (1) full turn counter- clockwise.
4. Hook Return Spring (F) to Bolt (G).
5. Remove the three (3) Hopper Clamps (A) and place the Hopper over the front plate collar. Align one of the cutout notches in the flange of the hopper with the locking bracket (B).
6. Reinstall the three Hopper Clamps. DO NOT over tighten. Hopper must be free to swivel. Disengage Lock Bracket (B) and swivel Hopper entire 360 degrees. Adjust clamp tightness as necessary.

Install Discharge Elbow & Collection Bag —

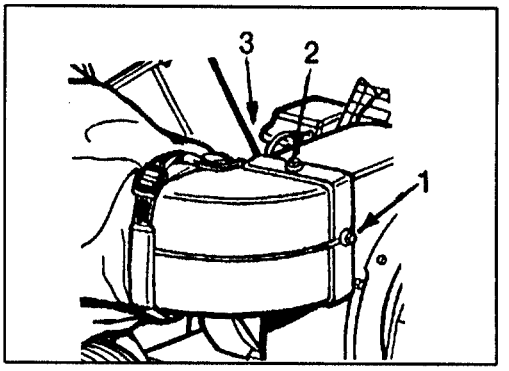

Parts Required: Discharge Elbow, three (3) 5/16" x 3/4" Hex Hd Bolts, three (3) 5/16" Flat Washer, Collection Bag.

1. Place Elbow on housing opening with opening pointing to the rear of the machine. Secure with three (3) bolts and washers.

⚠ DANGER

Never operate unit without collection bag installed unless optional discharge chute extension is installed. Extra care must be taken to direct the discharge away from all people and animals. Serious personal injury from flying materials is possible.

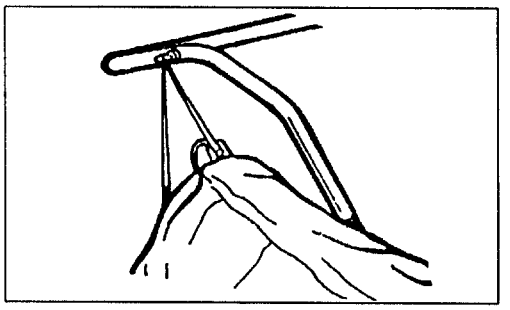

2. Place the open end of the collection bag over the elbow opening. Tighten the strap securing the bag to the elbow.
3. Hang the loop found at the rear of the bag on the "J" bolt located on the handle bar.

Prepare Engine for Operation —

IMPORTANT Engine is shipped **without** oil. Follow instructions found in Engine Manufacture's Operators Manual for Start-up instructions.

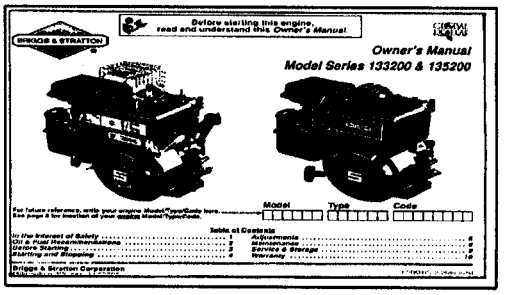

PRE-OPERATION

Fuel and Lubricant Requirements — 4 Stroke Engine

Engine, Gasoline and Lubricating Oil - Refer to Engine Manufacturers Operators Manual for Oil and Fuel recommendations.

Transmission Oil -- Transmission is lubricated for the life of the product and does not require checking or addition of oil.

Storage- Fuel storage laws vary by locality. Contact your local government for the laws affecting your area. As a precaution, store fuel in an approved, air tight container. Store in a well ventilated, unoccupied building, away from sparks and flames.

IMPORTANT Stored fuel ages. Do not buy more fuel than you expect to use in thirty (30) days.

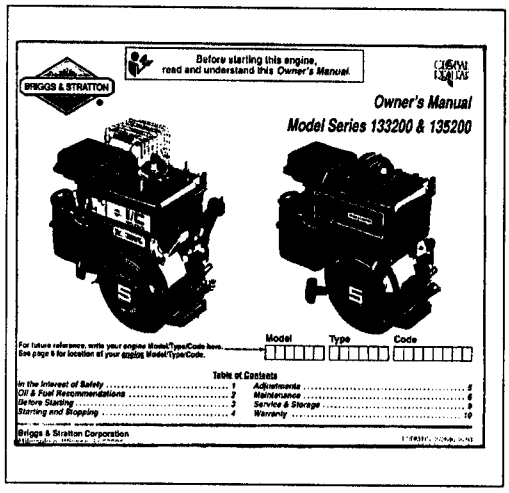

OPERATION - ALL MODELS

⚠ WARNING

Do not attempt adjusting, modifying or repairing the Engine Governor System. Serious personal injury or unit damage may result. If a problem exists contact your Authorized ECHO Servicing Dealer for repairs.

NOTE Instructions for safe engine operation are found in the Engine Manufacturer's Operators Manual packed separately.

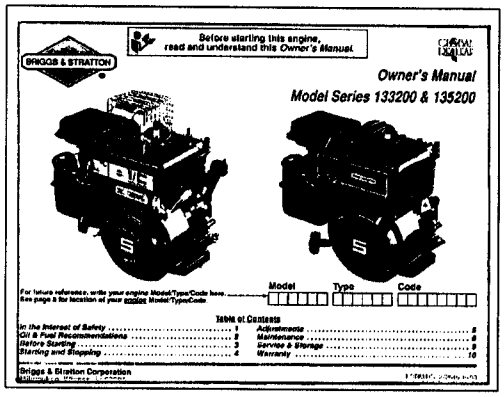

NOTE In the event the unit is clogged or jammed, stop engine and allow time for all moving parts to come to rest. Disconnect spark plug and move it away from the plug. Allow muffler and engine to cool before removing clogged materials.

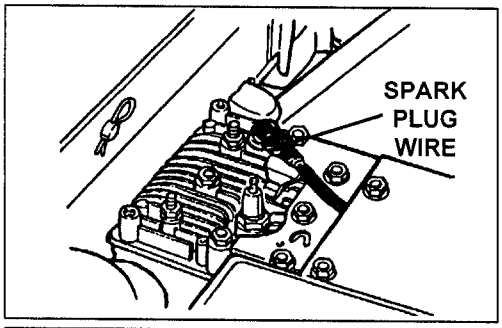

There are two basic modes of operation possible with your Chipper/Shredder/Vacuum/Blower. The first is stationary where the material to be processed is brought to the machine. The second is mobile where the machine is pushed or self- propelled over the area to be vacuumed or blown clear.

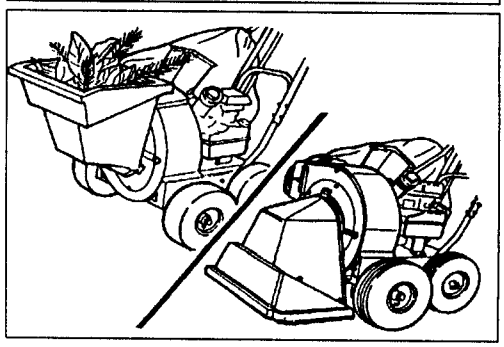

Stationary Shredding/Chipping —

WARNING

Stationary operation is possible with and without the Collection Bag. If operated without the bag, the Optional Discharge Chute Extension must be installed or serious injury from flying debris can occur.

WARNING

When operating with the Optional Discharge Chute Extension, use extreme care not to direct the air flow toward others in the area. The fifty (50) foot (15m) safety zone must be strictly enforced or serious personal injury can occur.

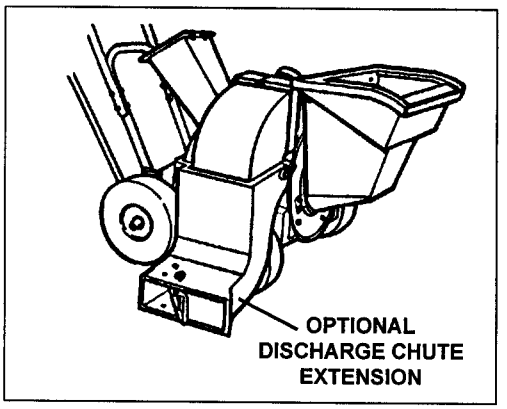

1. Push the unit to a solid, level work area using the handlebar. Block the wheels to prevent movement.

2. Position the unit for ease of access to the material to be Shredded or Chipped.

3. Install the Collection Bag or Optional Discharge Chute Extension.

4. Shift the unit into Neutral (self propelled model) and start the engine. Set the throttle at Wide Open Throttle (WOT).

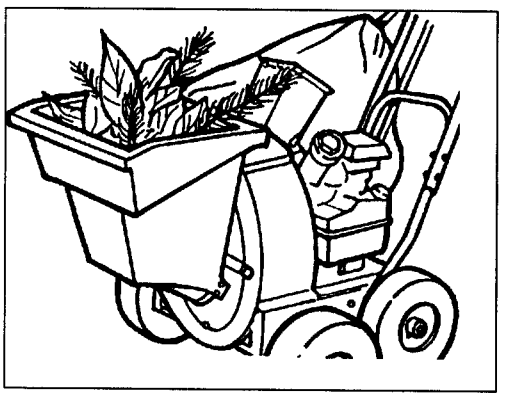

WARNING

DO NOT put any material in the shredding hopper larger than 1/2" in diameter. Serious personal injury can occur from flying material.

5. Material consisting mostly of leaves can be raked next to the hopper with the hopper turned to the side (perpendicular) and the leaves will be drawn into the machine and shredded.

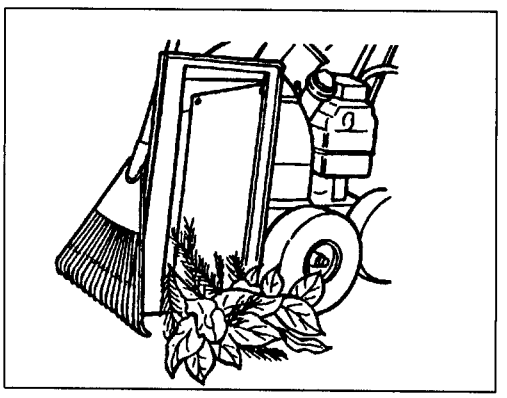

6. Material containing small branches, up to 1/2" (13mm) in diameter, is placed on top of the hopper opening. The machine will self feed. DO NOT feed material faster than the machine can handle.

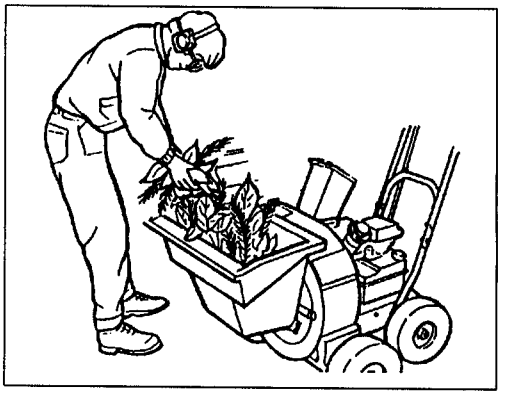

DANGER

DO NOT place hand beyond line on safety decals. Serious personal injury can occur.

7. Material over 1/2" (13mm) but less than 3" (75mm) can be fed through the Chipper Chute. Feed branches slowly and carefully large end first. NEVER force a branch in the chipper chute.

8. When the collection bag is full, STOP the engine and allow it to come to a complete stop before removing the bag.

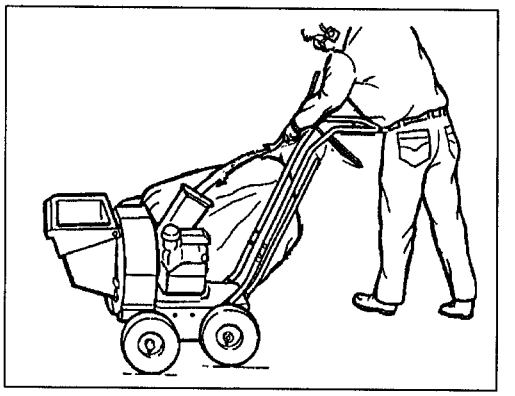

CAUTION

Under normal shut down circumstances (engine shut down and stopped), the Shredding/Chipping Rotor will continue to turn for approximately twenty (20) seconds. Not waiting for unit to come to a complete stop can result in serious injury.

Mobile Vacuuming Leaves —

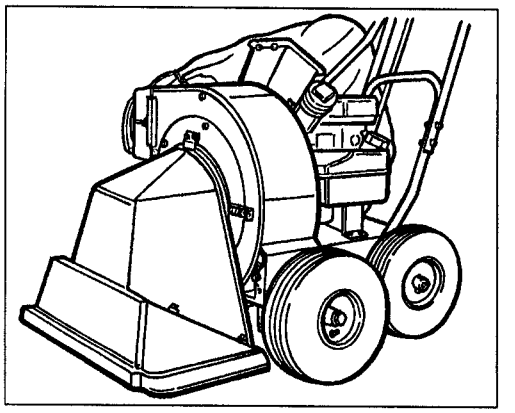

WARNING

Mobile operation is possible with and without the Collection Bag. If operated without the bag, the Optional Discharge Chute Extension must be installed.

1. Check the hopper to ground clearance. Adjust the hopper height as required.

2. Install the Collection Bag or Optional Discharge Chute Extension.

WARNING

Operation with the Optional Discharge Chute Extension requires extreme care. Do not direct the air flow toward others in the area. The 50 foot (15 m) safety zone must be strictly enforced or serious personal injury can occur.

3. Shift the unit into Neutral (self propelled model) and start the engine. Set throttle control at Wide Open Throttle (WOT).

4. Shift into gear and pull up on bail engaging the drive (self propelled model) or push the unit over the area needing vacuuming. Adjust forward speed to match the difficulty of vacuuming. Move slower when the volume of leaves is large. To change gears, Release Bail, come to a Complete Stop then move the Gear Lever to the desired setting.

5. When collecting the shredded leaves in the Bag, try to plan your path so you will frequently pass the point you will be depositing the shredded leaves.

6. When the Collection Bag is full, Stop the engine and allow it to come to a complete stop prior to removing the bag.

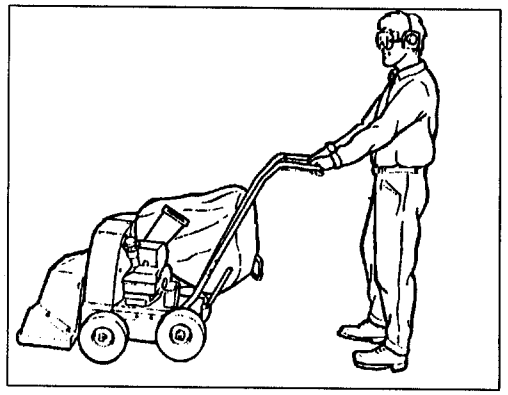

CAUTION

Under normal shut down circumstances (engine shut down and stopped), the Shedding/Chipping Rotor will continue to turn for approximately twenty (20) seconds. Not waiting for unit to come to a complete stop can result in serious injury.

Operation as a Blower - Optional Accessory

WARNING

Operation as a blower requires the installation of the Optional Discharge Chute Extension. Use extreme care not to direct the air flow toward others working in the area. The fifty (50) foot (15m) safety zone must be strictly enforced or serious personal injury can occur.

1. Mount Optional Discharge Chute Extension. Refer to Installation Instructions in Blower Package.

2. Place the Shredder Hopper in the up position.

3. Shift the unit into Neutral (self propelled model) and start the engine. Set throttle control at Wide Open Throttle (WOT).

4. Shift into gear and pull up on bail engaging the drive (self propelled model) or push the unit over the area to be blown clear. Adjust forward speed to match the difficulty of blowing. Move slower when the volume of leaves is large. To change gears, Release Bail, come to a complete stop, then move the Gear Lever to the desired setting.

5. Try to plan your path so you will direct the leaves to one area for easier cleanup.

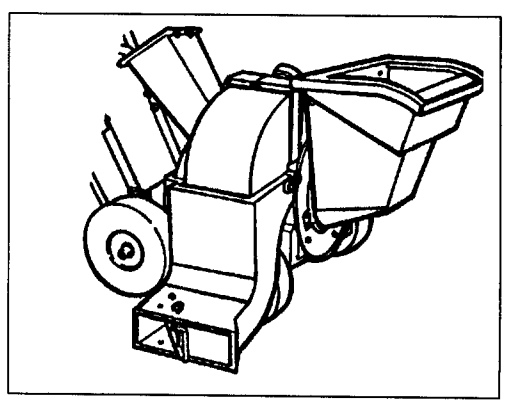

MAINTENANCE

Your ECHO product is designed to provide many hours of trouble free service. Regular scheduled maintenance will help your product achieve that goal. If you are unsure or are not equipped with the necessary tools, you may want to take your unit to an authorized ECHO Service Dealer for maintenance. To help you decide whether you want to DO-IT-YOURSELF or have an ECHO Dealer do it, each maintenance task has been graded.

Level 1: Easy to do. Most required tools are common to average household.

Level 2: Moderate difficulty. Some specialized tools may be required.

Level 3: Experience and skill required. Specialized tools are required. Echo recommends this level of service be performed by an authorized Echo Service Dealer.

⚠ DANGER

Before performing any maintenance or repair, STOP engine and allow time for all moving parts to come to complete rest. Disconnect spark plug wire and move it away from the plug. Allow muffler and engine to cool before beginning maintenance. Failure to follow these instructions may result in serious personal injury.

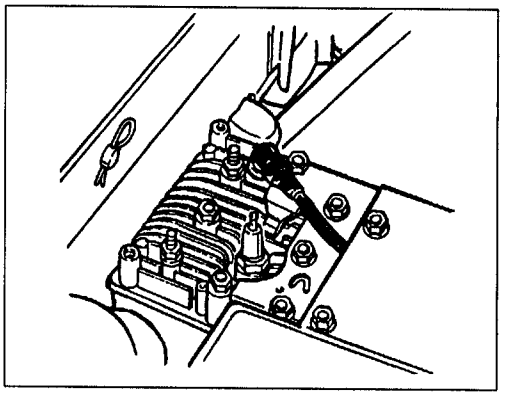

Cleaning — Level 1

Tools Required: Stiff Bristle Brush, Drying Rag, Garden hose and normal water pressure.

Parts Required: As Needed.

NOTE To ensure long life and consistent performance, cleaning after each use is recommended.

1. Brush accumulated dirt and debris from all surfaces.
2. Remove the Collection Bag and empty completely. If bag is damp/wet from processing green or wet material hang to dry. NEVER store bag wet.
3. Remove loose material from Discharge Elbow. Check Bar Grate for evidence of material that has dried to the grate bars. If necessary, the Bar Grate can be removed for cleaning by removing the Discharge Elbow, Spring Pins and Clevis Pins. Grate can now be lifted from the Shredder Housing outlet.

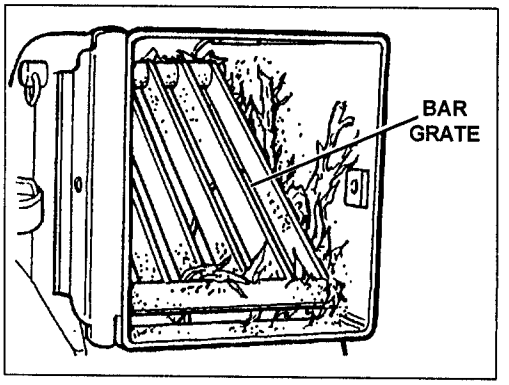

⚠ DANGER

Do not operate unit without Bar Grate in position. Serious personal injury can occur from flying material.

4. Protect the engine from direct water spray and clean the rest of the unit with water. Best results are experienced by wetting the unit inside and out. Allow the water to soften the dirt then rinse clean with the hose.

5. Engine cleaning is covered in the Engine Manufacturers Operators Manual.4.

6. When assembling the grate into the blower housing, the grate should be aligned with the raised edges out towards discharged outlet as shown in (A). The extended ends of the grate as shown in (B) must be installed against the front wall of the Blower Housing (Hopper Side). When grate is properly installed clearance between the two grate flanges on the left will be 1" apart, with 3/4" clearance between the remaining grate flanges.

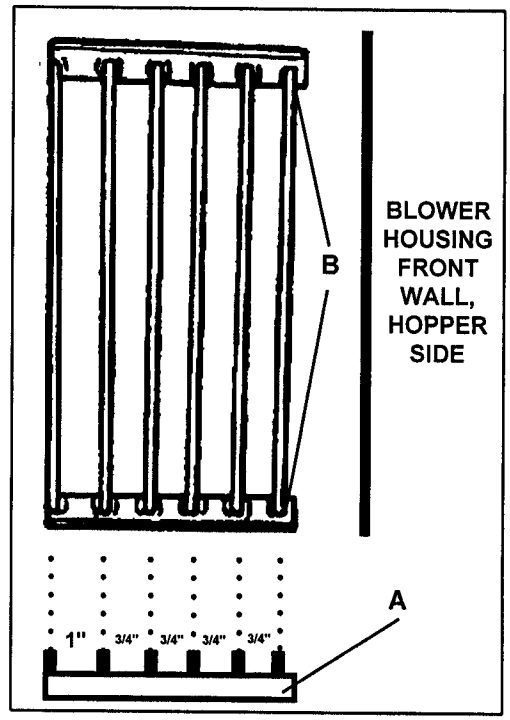

NOTE Improper grate installation may cause shredder hammer failure.

NOTE If Poor Vacuuming and Shredding Action is Experienced, additional cleaning of the interior may be needed.

Cleaning Unprocessed Material From Shredding Chamber —

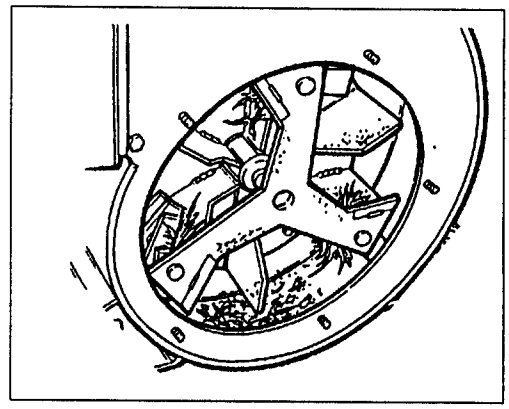

7. Remove five (5) Nylok locknuts securing the Front Cover to the Shredder Housing and lift Front Cover from the unit.

8. Clean all unprocessed material from inside the Shredder Housing and from the Rotor. Rinse clean with water.

9. Install the Front Cover and tighten the Locknuts.

NOTE The nut retaining the Hopper Latch is not tightened but left loose enough to allow free movement of the Latch.

10. Wipe water from the unit and place in direct sunlight (if possible) to thoroughly dry. Run unit for five (5) minutes to dry inside components.

Lubrication —

DANGER

Before performing any maintenance or repair, STOP engine and allow time for all moving parts to come to complete rest. Disconnect spark plug wire and move it away from the plug. Allow muffler and engine to cool before beginning maintenance. Failure to follow these instructions may result in serious personal injury.

Regular Lubrication is important to the long life of your Chipper/Shredder. Always use the lubricant recommended. Use of product other than that specified may affect your Warranty.

Wheel Bearings — Level 1

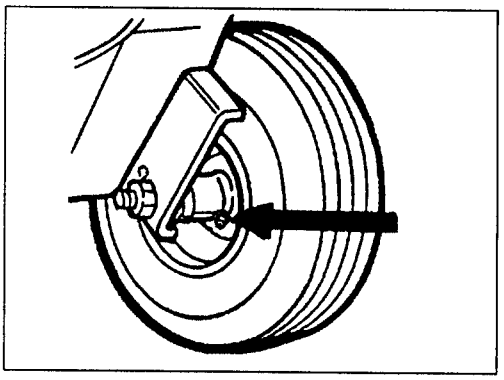

Tools Required: Grease Gun, Clean Shop Cloth.
Parts Required: Lithium Based Chassis Grease

> **NOTE** Only the front wheel bearings require lubrication. The rear wheel bearings are sealed.

1. Clean the grease fitting and pump grease in the bearing until the grease just begins to squeeze from the wheel. Remove excess grease.

Drive Chain & Jack Shaft — Level 2

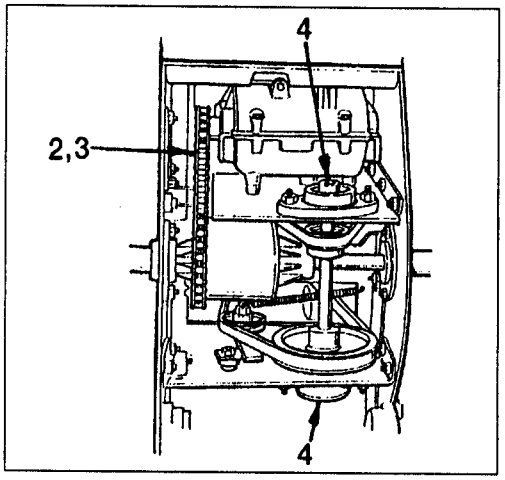

Tools Required: Cleaning Brush. 1" or 2" medium bristle paint brush, oil can, Grease Gun.

Parts Required: Kerosene or another oil based solvent, 20W engine oil, Lithium based chassis grease.

1. Remove bottom cover.
2. Clean drive chain with kerosene and a brush. Apply a generous coating to the chain and allow kerosene to soak in, approximately ten (10) minutes. Rinse with clean kerosene and dry.
3. Coat chain with clean 20W oil and allow oil to soak in. Wipe excess oil from chain.
4. Clean grease fittings on each jack shaft support bearing and fill each bearing with grease. Wipe excess grease from bearings.

Transmission —

Transmission is lubricated for the life of the product. No provisions are made for checking or adding lubricant.

Replacing/Sharpening Chipper Blades

Replacing Hammers —Level 3 **(Echo recommends this level of service be performed by an authorized Echo Service Dealer.)**

Tools Required: 1/2" open end wrench, 9/16" Socket Wrench with extension, 15/16" open end wrench, *Loctite, Blue, No. 262. (* Loctite is a registered Trademark), 5/8"-11 x 4-1/2" Hex Hd Bolt, 2" x 2" x 2' length of wood or "C-Clamp".

Parts Required: Chipper Knives, Hammers.

> **⚠ DANGER**
>
> Before performing any maintenance or repair, STOP engine and allow time for all moving parts to come to complete rest. Disconnect spark plug wire and move it away from the plug. Allow muffler and engine to cool before beginning maintenance. Failure to follow these instructions may result in serious personal injury.

IMPORTANT This maintenance procedure requires use of Loctite. Unit must not be used for 24 hours after reassembly to allow time for proper curing.

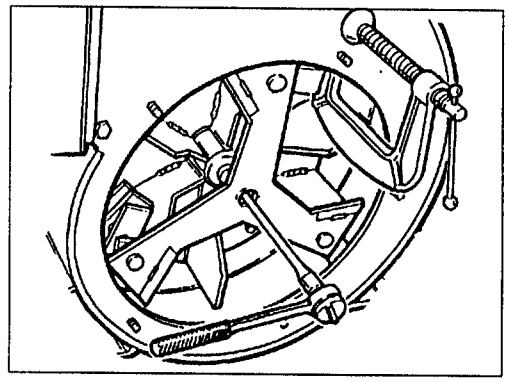

Remove Rotor —

1. Remove five (5) locknuts securing the Front Cover to the Shredding Housing and lift Front Cover from the unit.

2. Remove the Bolt located at the center of the Rotor. Hold Rotor in place with a 2" x 2" x 2' length of wood or a "C"- Clamp.

NOTE If "C-Clamp" is used, protect finish with cardboard.

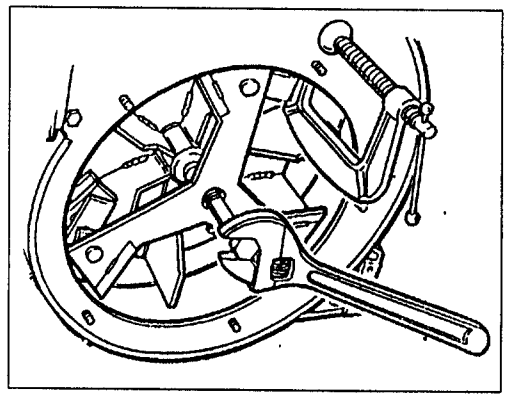

3. Lubricate threads of 5/8" - 11 X 4-1/2 Hex Hd Bolt and thread in the end of the rotor until bolt touches crankshaft. Tighten the bolt against the crankshaft end, then tap sharply with a hammer. The rotor will loosen slightly. Retighten the bolt and repeat procedure until the rotor is completely loose.

4. Check that all Hammers are swung "IN" and will clear the opening in the Shredder Housing. Continue to turn the Bolt until the Rotor can be lifted from the unit.

5. Inspect Rotor, Chipper Knives and Hammers. Sharpen or replace as needed. Knives and/or Hammers should be replaced as a set to assure proper balance. Inspect Square Rotor Key. Replace if evidence of shearing is noted.

6. Clean engine shaft and place the Square Rotor Key in the keyway.

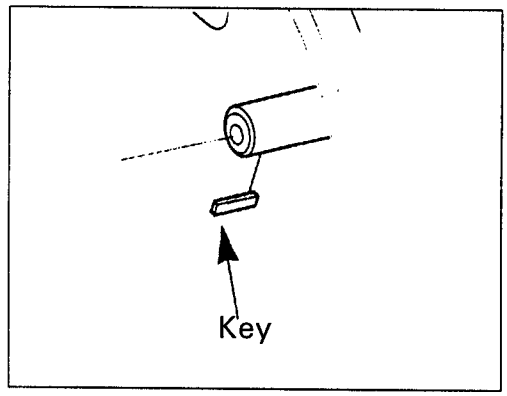

7. Wipe the bore of the Rotor with a clean rag. Note the position of the keyway, align it with the Key in the engine shaft and push the Rotor on the shaft. Rotor is correctly installed when the front of the Rotor is 5/8" to 3/4" (16-19 mm) below the front of the Shredder Housing.

8. Clean the threads of the Rotor retaining bolt. Coat threads with Loctite and tighten to 50 ft. lbs. Do not run unit for 24 hours.

9. Rotate Rotor several revolutions to assure it has been installed correctly and does not contact any part of the machine. Check that it rotates evenly and does not wobble.

10. Install the Front Cover and tighten the Locknuts. The one nut retaining the Hopper Latch is not tightened but left loose to allow free movement of the Latch.

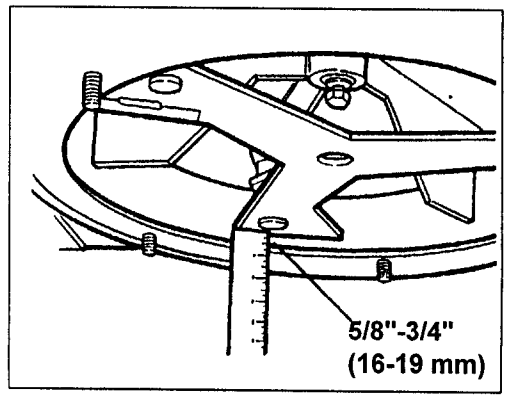

Remove Chipper Knives — Level 3 **(Echo recommends this level of service be performed by an authorized Echo Service Dealer.)**

Tools Required: 1/2" open End Wrench, Hexagon Wrench, Loctite, Blue, No. 262.

Parts Required: Chipper Knives

WARNING ⚠ DANGER

Chipper knives are VERY sharp. Use extreme care removing and installing knives or serious personal injury will occur.

IMPORTANT This maintenance procedure requires use of Loctite. Unit must not be used for 24 hours after reassembly to allow time for proper curing.

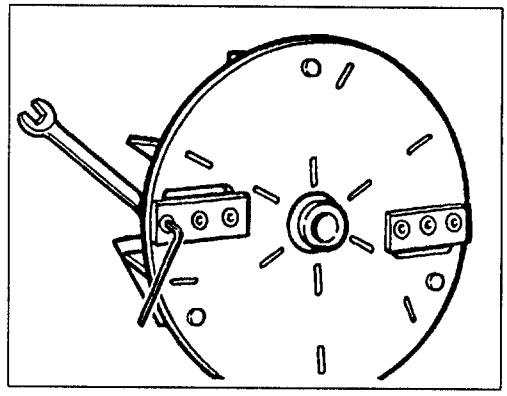

1. Remove the three (3) Socket Head Capscrews and nuts that secure each knife.

2. Inspect knives for cracks, missing pieces and flatness. If replacement is required, replace knives as a pair to assure proper balance.

3. If knives are to be re-sharpened, use great care not to overheat knife (turn edge glowing red while grinding and blue/black as it cools). Grind edge to maintain the original 45 degree angle. Cool knife with water during grinding. If you are not familiar with grinding, take the knives to your ECHO dealer for sharpening.

4. Carefully clean knife mounting surface and install knives with Capscrews and Nuts using Loctite. Follow Loctite instructions included with the product.

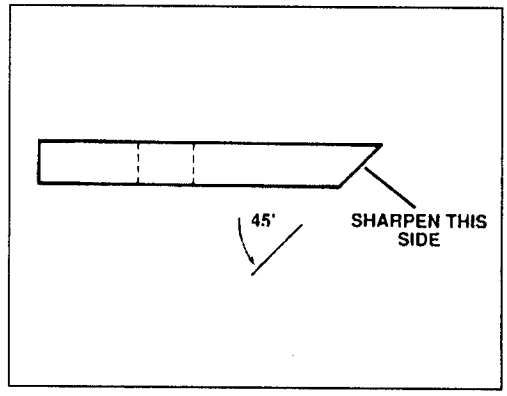

Replace Hammers — Level 3 **(Echo recommends this level of service be performed by an authorized Echo Service Dealer.)**

Tools Required: 1/2" Open End Wrench, 1/2" Socket Wrench with Extension, Loctite, Blue, No. 262.

Parts Required: Hammers and other parts as required.

IMPORTANT This maintenance procedure requires use of Loctite. Unit must not be used for 24 hours after reassembly to allow time for proper curing.

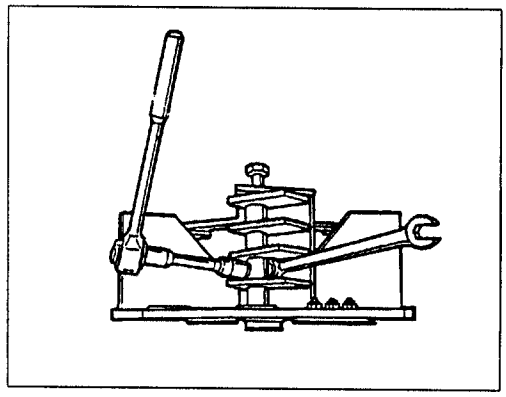

1. Remove the Bolt and Nut retaining the Rotor Pin, slide the Pin from the Rotor along with the hammers, spacers and washers.

2. Inspect and replace worn and damaged parts. Clean bolt threads.

3. Reassemble following illustration. Use Loctite on the Rotor Pin retaining Bolt. Follow Loctite instructions included with the product.

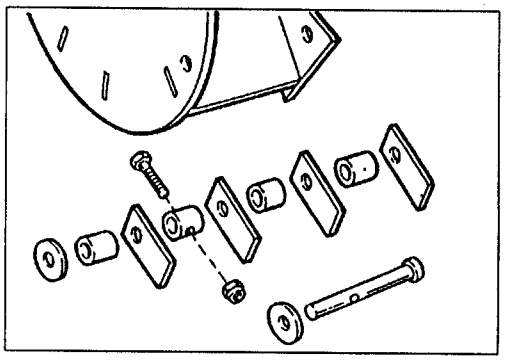

Drive Belt Replacement — *Level 3* (Echo recommends this level of service be performed by an authorized Echo Service Dealer.)

Tools Required: 7/16" Open End Wrench, Hex Wrench, 3/8" Open End Wrench.

Parts Required: Engine to Jackshaft Drive Belt, Jackshaft to Transmission Drive Belt.

⚠ DANGER

Before performing any maintenance or repair, STOP engine and allow time for all moving parts to come to complete rest. Disconnect spark plug wire and move it away from the plug. Allow muffler and engine to cool before beginning maintenance. Failure to follow these instructions may result in serious personal injury.

1. Remove Belt Guard, Shredding Hopper and Bottom Cover. Stand unit on it's front and block securely.

2. Remove four (4) Socket Head Capscrews, Spacers and Washers and remove Starter Assembly.

3. Remove Idler Return Spring (A).

4. Loosen set screws in bearings (B) and pulleys (C). Slide jackshaft (D) from bearings.

5. Remove old belts and install new belts.

6. Slide jackshaft through the rear bearing, driven pulley, transmission drive pulley and front bearing. Position bearing setscrews over milled flats on Jackshaft and tighten.

7. Replace Idler Return Spring.

8. Align Pulleys on Jackshaft with engine and transmission pulleys and tighten setscrews.

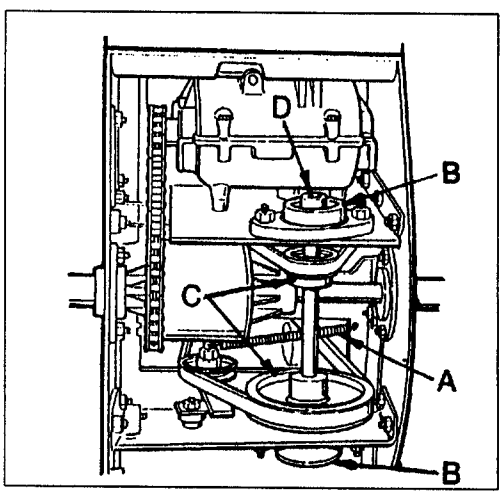

IMPORTANT Correct belt alignment increases belt life and performance.

9. Install Starter and Belt Guard.

10. Install bottom Cover, return unit to its wheels and install Shredding Hopper.

Traction Drive —

Traction Drive testing and adjustment is needed whenever a new belt is installed and periodically during the life of the product. To see if your Traction Drive needs adjusting perform the following checks:

Checking Belt Tension — Level 1

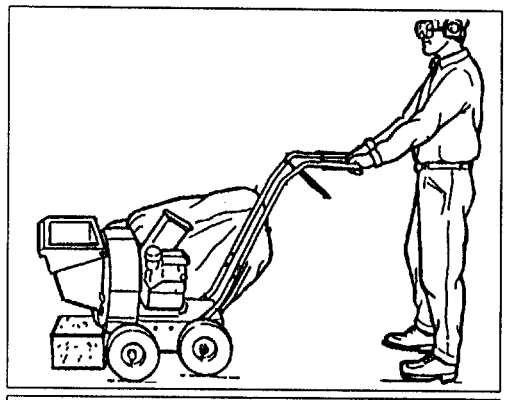

1. Park your unit on a level, dry, concrete/asphalt surface. Block the front wheels to prevent forward movement. Do not use the Hopper as a bumper or damage to the Hopper will occur.

> **NOTE** The tires may spin during this test leaving Black marks on the pavement. Select the test site with this in mind.

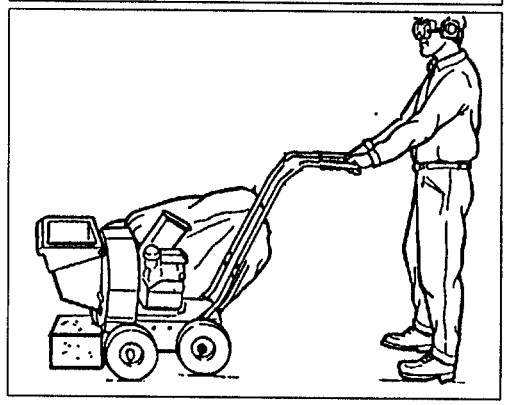

2. Start engine and place throttle in WOT (Wide Open Throttle) position. Shift transmission to First (1) gear. **Do not pull up on Bail** to engage drive. Observe unit. If the drive wheels try to move and you can see the belt is not slipping freely on the engine drive pulley, the belt tension needs to be relaxed.

3. With engine still running WOT, shift transmission to Third (3) gear. Check that unit is firmly blocked in place and pull up on bail to engage Drive Belt. One or both Rear wheels should turn. If neither wheel turns, belt tension needs to be increased.

Adjusting Belt Tension — Level 2

Tools Required: Two (2) 1/2" Open End Wrench.

Parts Required: As needed.

> **⚠ DANGER**
>
> Before performing any maintenance or repair, STOP engine and allow time for all moving parts to come to complete rest. Disconnect spark plug wire and move it away from the plug. Allow muffler and engine to cool before beginning maintenance. Failure to follow these instructions may result in serious personal injury.

To tighten belt:

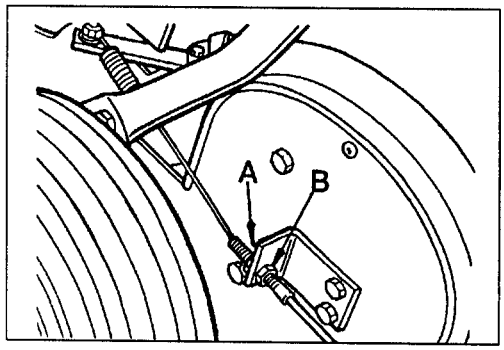

1. Loosen Nut (A) 2 to 3 full turns.

2. Tighten Nut (B).

3. Retest by following Step 3, "Checking Belt Tension". Repeat Testing and Adjusting until proper belt tension is reached.

4. If proper Belt Tension cannot be achieved through this adjustment, the belt should be replaced.

To loosen belt:

5. Loosen Nut (B) 2 to 3 full turns.

6. Tighten Nut (A).

7. Retest by following Step 2, "Checking Belt Tension". Repeat Testing and Adjusting until proper belt tension is reached.

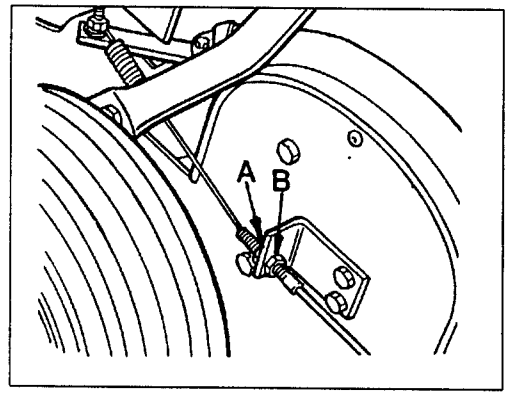

Storage - Long Term

If the Chipper/Shredder will not be used more than 30 days, the following Storage procedure must be performed.

NOTE Always allow the unit to cool before storing.

1. Clean Unit. Follow instructions in this section.

2. Prepare engine for storage. Refer to Storage Information in the Engine Operators Manual.

3. Perform Lubrication specified in this section.

4. Perform Pre-operation inspection.

5. Use touch-up paint to cover any scratches or nicks in the paint before rust begins. Wipe all surfaces with a cloth saturated with light oil, silicone spray or other protective products.

6. Store Chipper/Shredder in a clean, dry, well ventilated area but NOT near a stove, furnace or water heater which uses a pilot light or any device that can create a spark.

7. Store the unit out of the reach of children.

Service & Storage

STORAGE INSTRUCTIONS

Engines stored over 30 days need to be protected or drained of fuel to prevent gum from forming in fuel sytem or on esential caburetor parts.

1. For engine protection, we recommend use of Briggs & Stratton Gasoline Additive. Part No 5041, available from any Authorized Briggs & Stratton SErvice Dealer. Mix Additive with fuel in fuel tank or storage container. Run engine for a short time ot circulate Additibe through carburetor. Engine and fuel can be sored up to 24 months.

NOTE: If additive is not used or if engine is operating on gasoline containing alcohol, such as gasohol, remove all fuel from tank and run engine until it stops from alck of fuel.

2. While engine is still warm, drain oil from cankcase (see page 6). Refill with fresh oil of recommended grade (see chart on page 2).
3. Remove spark plug and pour about 1/2 oz. (15 m) of engine oil into cylinder. Replace spark plug and crank slowly to distribute oil.
4. clean dirt and chaff from cylinder, cylinder head fins, blower housing, roating screen and muffler areas (see page7).
5. Store in a clean and dry area, but NOT near a stove, furnace or water heater which uses a pilot light or any device that can create a spark.

SERVICING INFORMATION

Parts—

Genuine ECHO Parts and ECHO RE POWER Parts / Assemblies for your ECHO product are available only from an Authorized, ECHO Dealer. When you do need to buy parts ALWAYS have the Model Number and Serial Number of the unit with you. You can find the model number on top of the unit and the serial number on the decal attached to the underside of the Transmission Cover (Self Propelled Models) or the Engine Tray just below the handles (Walk Behind Model). For future reference, write them in the space provided below.

MODEL NO. _____ **SN.** _____

Service—

Service of this product during the warranty period must be performed by an Authorized ECHO Service Dealer. For the name of the Authorized ECHO Service Dealer nearest you, ask your retailer or call: 1-800-432 ECHO (3246). When presenting your unit for Warranty service/repairs, proof of purchase is required.

Warranty Card—

This card is our means of registering all original owners of ECHO equipment and the card plus proof of purchase provides you the assurance that authorized warranty work will be done. It also provides a direct link between you and ECHO if we find it necessary to contact you.

Echo System2 TM
Chipper/Shredder/Vacuum
Serial Number: 05 060 1050
Echo Incorporated
Richmond, Virginia 23223
US Patent # 5,340,035

(Sample Decal)

DEALER?

Call

1-800-432-ECHO (3246)

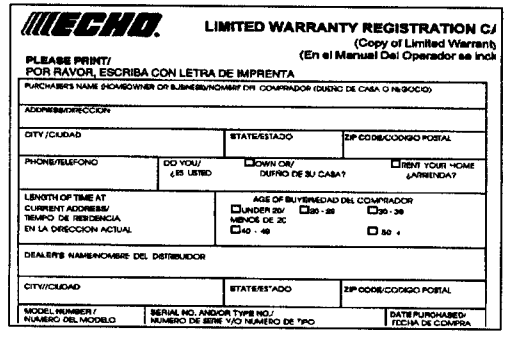
ECHO
LIMITED WARRANTY REGISTRATION C/
(Copy of Limited Warranty
(En el Manual Del Operador se incl
PLEASE PRINT/
POR FAVOR, ESCRIBA CON LETRA DE IMPRENTA
PURCHASER'S NAME (NOMBRE DEL COMPRADOR (DUEÑO DE CASA O NEGOCIO)
ADDRESS/DIRECCION
CITY/CIUDAD
STATE/ESTADO
ZIP CODE/CODIGO POSTAL
PHONE/TELEFONO
DO YOU/ ¿ES USTED
OWN OR/ DUEÑO DE SU CASA?
RENT YOUR HOME ¿ARRIENDA?
LENGTH OF TIME AT CURRENT ADDRESS/ TIEMPO DE RESIDENCIA EN LA DIRECCION ACTUAL
AGE OF BUYER/EDAD DEL COMPRADOR
UNDER 20/ MENOS DE 20
20 - 29
30 - 39
40 - 49
50 +
DEALER'S NAME/NOMBRE DEL DISTRIBUIDOR
CITY/CIUDAD
STATE/ESTADO
ZIP CODE/CODIGO POSTAL
MODEL NUMBER / NUMERO DEL MODELO
SERIAL NO. AND/OR TYPE NO./ NUMERO DE SERIE Y/O NUMERO DE TIPO
DATE PURCHASED/ FECHA DE COMPRA

SPECIFICATIONS

FEATURES	MODEL CSV-5	MODEL CSV-5S	MODEL CSV-8S
Vacuum Width	22"	22"	22"
Chipper (max. branch diameter)	3"	3"	3"
Hopper Height Adjustment Range	5/8" - 12-1/2"	5/8" - 12-1/2"	5/8" - 12-1/2"
Engine (Briggs & Stratton)	5 H.P.	5 H.P.	8 H.P.
Fuel Capacity	1 gallon	1 gallon	1.2 gallon
Bag Capacity	2.8 BU.	2.8 BU.	2.8 BU.
Discharge Chute Extension	Optional	Optional	Optional
Vacuum Hose	Optional	Optional	Optional
Hose Length	10'	10'	10'
Hose Diameter	4"	4"	4"
PROPULSION	**PUSH**	**SELF**	**SELF**
M.P.H.			
First	N/A	0.91	0.91
Second	N/A	1.19	1.19
Third	N/A	2.8	2.8
Reverse	N/A	1.38	1.38
Differential	No	Yes	Yes
Chain Drive	N/A	Yes	Yes
TIRES	**PNEUMATIC**	**PNEUMATIC**	**PNEUMATIC**
Tire Size	10" x 4"	10" x 4"	10" x 4"
Tire Air Pressure	30 psi front & rear	30 psi front & rear	30 psi front & rear
WEIGHT	**148 Lbs.**	**200 Lbs.**	**220 Lbs.**

DECALS, WARNING/INFORMATIONAL

Locate these safety decals on your unit. The complete unit illustration found in the "DESCRIPTION" section, will help you locate them. Make sure the decals are legible and that you understand and follow the instructions on them. If a decal cannot be read, a new one can be ordered from your ECHO dealer.

CAUTION

- READ AND UNDERSTAND THE OPERATOR'S MANUAL BEFORE USING THIS CHIPPER/SHREDDER.
- KEEP BYSTANDERS, CHILDREN AND PETS AT LEAST 50 FT. (15M) AWAY FROM OPERATING AREA.
- KEEP ALL SHIELDS AND GUARDS SECURELY IN PLACE.
- DO NOT INSTALL, REMOVE OR ADJUST ANY PART ON UNIT WHILE ENGINE IS RUNNING.
- BE SURE ALL FASTENERS AND COMPONENTS ARE SECURELY IN PLACE.
- DO NOT RUN ENGINE IN ENCLOSED AREA. EXHAUST GASES CONTAIN POISONOUS CARBON MONOXIDE.
- TO AVOID A FIRE, KEEP LEAVES, GRASS AND OTHER COMBUSTIBLE MATERIALS AWAY FROM HOT ENGINE AND MUFFLER.
- NEVER USE HANDS OR FEET TO CLEAR JAMS, USE ONLY LONG WOODEN STICKS OR BRANCH AFTER ENGINE IS SHUT OFF AND ALL MOVING PARTS HAVE COMPLETELY STOPPED AND SPARK PLUG WIRE HAS BEEN DISCONNECTED.
- ALWAYS WEAR ANSI Z87.1 APPROVED SAFETY GOGGLES AND ANSI 3.19 APPROVED EAR PROTECTION.
- AVOID WEARING LOOSE FITTING CLOTHING.

Part Number 740660900

DANGER

DO NOT START ENGINE UNLESS BELT COVER IS SECURELY ATTACHED. SEE OPERATOR'S MANUAL FOR FULL SAFETY AND MAINTENANCE INSTRUCTIONS.

Part Number 740661100

DANGER

ROTATING CUTTER BLADES. DO NOT OPERATE UNIT WITHOUT BAG OR OPTIONAL BLOWER ATTACHMENT PROPERLY INSTALLED.

ROTATING BLADE

DO NOT PUT HANDS OR FEET UNDER OR INTO UNIT WHEN ENGINE IS RUNNING.

THROWN OBJECTS

BEFORE USING, CLEAR AREA OF PEOPLE AT LEAST 50 FT. (15M) AND REMOVE OBJECTS THAT MAY BE THROWN BY BLADE.

WEAR EYE/EAR PROTECTION

AGAINST HITS FROM EVERY DIRECTION

DO NOT OPERATE UNIT WITHOUT DISCHARGE CHUTE, BAG AND DEFLECTOR FIRMLY IN PLACE.

Part Number 740660600

DANGER

ROTATING CUTTING BLADES. DO NOT PUT HANDS OR FEET INTO INLET OPENINGS WHEN ENGINE IS RUNNING.

TO AVOID SERIOUS PERSONAL INJURY, STOP ENGINE, REMOVE SPARK PLUG WIRE, ALLOW ENGINE TO COME TO A COMPLETE STOP BEFORE CLEARING OBSTRUCTION OR MAKING ANY ADJUSTMENTS.

CAUTION

READ OPERATOR'S MANUAL BEFORE OPERATING UNIT. DO NOT DEPOSIT BRANCHES LARGER THAN 1/2 INCH (13MM) DIAMETER INTO HOPPER. WEAR ANSI Z87.1 APPROVED SAFETY GOGGLES AND ANSI 3.19 APPROVED EAR PROTECTION. AVOID LOOSE FITTING CLOTHING. DO NOT OPERATE HOPPER IN POSITIONS OTHER THAN RECOMMENDED IN THE OPERATOR'S MANUAL.

NO HANDS BELOW THIS LINE

Part Number 740660700

DANGER

1. DO NOT PUT HANDS INTO UNIT WHEN ENGINE IS RUNNING.
2. DO NOT PUT ANY BRANCHES OVER 3 IN. (76MM) IN DIAMETER INTO CHIPPER.
3. ANSI Z87.1 APPROVED SAFETY GOGGLES SHOULD BE WORN WHEN OPERATING THIS UNIT.

TO AVOID SERIOUS PERSONAL INJURY, STOP ENGINE, REMOVE SPARK PLUG WIRE, ALLOW ENGINE TO COME TO A COMPLETE STOP BEFORE CLEARING OBSTRUCTION OR MAKING ADJUSTMENTS.

NO HANDS BELOW THIS LINE

DANGER

Part Number 740660500

PARTS CATALOG

To obtain a parts catalog send a check or money order for $2.00 per parts book made payable to ECHO, INCORPORATED. Include a sheet of paper stating your name and address and specify

CSV5, CSV5S, CSV8S Part Number 99922202641

Mail to:

ECHO, INCORPORATED
400 OAKWOOD ROAD
LAKE ZURICH, IL 60047

Please allow three to four weeks for delivery

ECHO, INCORPORATED
400 OAKWOOD ROAD
LAKE ZURICH, IL 60047

99922202699
9/95