# Operator's Manual SRM-3020U Grass Trimmer/ Brushcutter

**⚠ WARNING**

***The engine exhaust from this product contains chemicals known to the State of California to cause cancer, birth defects, or other reproductive harm.***

**⚠ WARNING**

***Read and understand all provided literature before use. Failure to do so could result in serious injury.***

Note: This product complies with CAN ICES-2/NMB-2.

X7502352300

© 01/24 ECHO Incorporated

# TABLE OF CONTENTS

Introduction ..... 4
Servicing Information ..... 5
Parts and Serial Number ..... 5
Service ..... 5
ECHO Consumer Product Support ..... 5
Product Registration ..... 5
Additional Literature ..... 5
Safety ..... 6
Manual Safety Symbols and Important Information ..... 6
International Symbols ..... 7
Personal Condition and Safety Equipment ..... 9
Equipment ..... 14
Emission Control (Exhaust & Evaporative) ..... 16
EPA Emissions Control Information ..... 16
Description ..... 17
Contents ..... 19
Assembly ..... 20
U-handle Installation ..... 20
Throttle Linkage and Ignition Leads ..... 21
Blade Installation ..... 22
Install Blade Shield and Blade ..... 23
Shield with Cut-off Knife and Nylon Line Head Installation ..... 23
Balance and Adjust Unit ..... 25
Operation ..... 25
Operation with Blades ..... 26
Blade Selection ..... 27
Fuel ..... 29
Starting Cold Engine ..... 32
Starting Warm Engine ..... 34
Stopping Engine ..... 35
Applications ..... 36
Operating Techniques - Nylon Line Head ..... 36
Operating Techniques - Metal or Plastic Blade ..... 37
Reaction Forces ..... 38
Blade Cutting Problems ..... 40
Maintenance ..... 41
Skill Levels ..... 41
Maintenance Intervals ..... 42
Air Filter ..... 43
Fuel Filter ..... 44
Spark Plug ..... 45


© 01/24 ECHO Incorporated

Cooling System ..... 46
Exhaust System ..... 47
Carburetor Adjustment..... 49
Lubrication ..... 50
Nylon Line Head Disassembly Instructions ..... 51
Nylon Line Replacement ..... 52
Sharpening Metal Blades ..... 54
Troubleshooting ..... 55
Storage ..... 57
Long Term Storage (Over 30 Days)..... 57
Specifications ..... 58
Product Registration ..... 60


© 01/24 ECHO Incorporated

# INTRODUCTION

Specifications, descriptions, and illustrative material in this literature are as accurate as possible. Specifications are subject to change without notice. Illustrations might include optional equipment and accessories, and might not include all standard equipment. Your equipment might appear slightly different than pictured equipment.

Read and understand all provided literature. Literature contains specifications and information for safety, operation, maintenance, storage, and assembly specific to this product. Scan QR codes for more information.

For additional literature, including safety manuals where applicable, or questions regarding terms used in this manual, visit:

https://www.echo-usa.com/manuals

OR

https://www.shindaiwa-usa.com/manuals


© 01/24 ECHO Incorporated

# SERVICING INFORMATION

## Parts and Serial Number

Genuine ECHO parts and assemblies for your ECHO products are available only from an Authorized ECHO Dealer. When you do need to buy parts, always have the model number and serial number of the unit with you. For future reference write them in the space provided below.

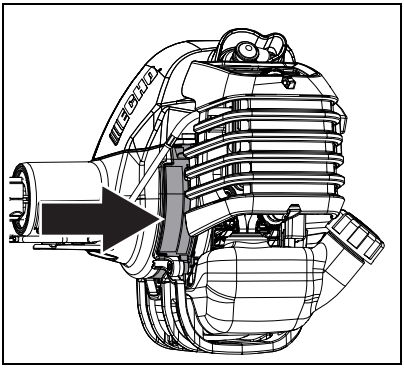

Model No. _____ Serial No. _____

## Service

Service of this product during the warranty period must be performed by an Authorized ECHO Service Dealer. For the name and address of the Authorized ECHO Service Dealer nearest you, ask your retailer or call: 1-800-432-ECHO (3246). Dealer information is also available on our Web Site www.echo-usa.com. When presenting your unit for Warranty service/ repairs, proof of purchase is required.

## ECHO Consumer Product Support

If you require assistance or have questions concerning the application, operation, or maintenance of this product, call the ECHO Consumer Product Support Department at 1-800-432-ECHO (3246) from 8:00 a.m. to 5:00 p.m. (Central Standard Time) Monday through Friday. Before calling, please know the model and serial number of your unit.

## Product Registration

Register your ECHO equipment online at www.echo-usa.com or by filling out the product registration sheet included in this manual. Registering your product confirms warranty coverage and provides a direct link to ECHO if we find it necessary to contact you.

## Additional Literature

In addition to finding information online, information is available from your Authorized ECHO Service Dealer, or by contacting ECHO Incorporated, 400 Oakwood Road, Lake Zurich, IL 60047, 1-800-432-ECHO (3246).


© 01/24 ECHO Incorporated

# SAFETY

## Manual Safety Symbols and Important Information

Throughout this manual and on the product itself, you will find safety alerts and helpful, informational messages preceded by symbols or key words. The following is an explanation of those symbols and key words and what they mean to you.

**DANGER**

***The safety alert symbol accompanied by the word "DANGER" calls attention to an act or condition which WILL lead to serious personal injury or death if not avoided.***

**WARNING**

***The safety alert symbol accompanied by the word "WARNING" calls attention to an act or condition which CAN lead to serious personal injury or death if not avoided.***

**CAUTION**

***The safety alert symbol accompanied by the word "CAUTION" calls attention to an act or condition which might lead to minor or moderate personal injury if not avoided.***

***NOTICE***

*The enclosed message provides information necessary for the protection of the unit.*

Note: This enclosed message provides tips for use, care and maintenance of the unit.

CIRCLE AND SLASH SYMBOL
This symbol means the specific action shown is prohibited. Ignoring these prohibitions can result in serious or fatal injury.


© 01/24 ECHO Incorporated

## International Symbols

| Symbol | Description | Symbol | Description |
|---|---|---|---|
| | Warning, See Operator's Manual | H | Carburetor Adjustment - High Speed Mixture |
| | Wear Eye, Ear and Head Protection | T | Carburetor Adjustment - Idle Speed |
| | Wear Hand and Foot Protection | L | Carburetor Adjustment - Low Speed Mixture |
| | Safety/Alert | STOP | STOP Switch |
| | Hot Surface | | Fuel and Oil Mixture |
| | | AVOID KICKOUT Keep Bystanders At Least 15 m (50 ft.) Away | |
| | | Beware Thrown Objects Wear Eye Protection | |
| | DO NOT Allow Flames or Sparks Near Fuel | Ignition ON I OFF O | Ignition ON / OFF |
| | DO NOT Smoke Near Fuel | | Purge Bulb |


© 01/24 ECHO Incorporated

| Symbol | Description | Symbol | Description |
|---|---|---|---|
| | Choke Control “RUN” Position (Choke Open) | | Choke Control “COLD START” Position (Choke Closed) |
| | Keep Feet Away From Blade | | Rotating Cutting Attachment |
| | | Keep Bystanders and Helpers Away 15 m (50 ft.) | |
| | Thrown Objects | | Direction of Blade |
| | DO NOT USE LINE HEADS - Blades Only | | DO NOT USE BLADES - Line Heads Only |
| test | | | |

Note: Not all symbols will appear on your unit.

© 01/24 ECHO Incorporated

## Personal Condition and Safety Equipment

**WARNING**

***Cancer and Reproductive Harm***
***www.P65Warnings.ca.gov***

**WARNING**

***The muffler or catalytic muffler and surrounding cover may become extremely hot. Always keep clear of exhaust and muffler area, otherwise serious personal injury might occur.***

**WARNING**

***Users of this product risk injury to themselves and others if the unit is used improperly and/or safety precautions are not followed. Proper clothing and safety gear must be worn when operating unit.***

### Physical Condition

Your judgment and physical dexterity may not be good:

- If you are tired or sick
- If you are taking medication
- If you have taken alcohol or drugs

Operate unit only if you are physically and mentally well.

### Eye Protection

**WARNING**

- **Eye protection that meets ANSI Z87.1 or CE requirements must be worn whenever you operate the unit.**
- **For additional safety, a full-face shield can be worn over safety glasses or goggles to provide protection from sharp branches or flying debris.**


© 01/24 ECHO Incorporated

## Hand Protection

Wear sturdy, no-slip, rubber work gloves to improve your grip on the handles. Gloves also provide protection against cuts and scratches, cold environments, and reduce the transmission of machine vibration to your hands.

## Hearing and Ear Protection

ECHO recommends wearing personal protective equipment whenever unit is used.

## Breathing Protection

Operators who are sensitive to dust or other common airborne allergens may need to wear a dust mask to prevent inhaling these materials while operating unit. Dust masks can provide protection against dust, plant debris, and other plant matter such as pollen. Make sure the mask does not impair your vision, and replace the mask as needed to prevent air restrictions.

## Proper Clothing

Wear snug-fitting, durable clothing:

- Pants should have long legs, shirts should have long sleeves.
- DO NOT WEAR SHORTS.
- DO NOT WEAR TIES, SCARVES, JEWELRY, or clothing with loose or hanging items that could become entangled in moving parts or surrounding growth.
- Keep clothing buttoned or zipped, and keep shirt tails tucked in.
- Wear sturdy work shoes with nonskid rubber soles.
- DO NOT WEAR OPEN TOED SHOES.
- DO NOT OPERATE UNIT WITH BARE FEET.

Keep long hair away from engine and air intake. Retain hair with cap or net.

Heavy protective clothing can increase operator fatigue, which may lead to heat stroke. Schedule heavy work for early morning or late afternoon hours when temperatures are cooler.


© 01/24 ECHO Incorporated

## ⚠ WARNING

***The components of this machine generate an electromagnetic field during operation, which can interfere with some pacemakers. To reduce the risk of serious or fatal injury, persons with pacemakers should consult with their physician and the pacemaker manufacturer before operating this machine. In the absence of such information, ECHO does not recommend the use of this machine by anyone who has a pacemaker.***

### Extended Operation and Extreme Conditions

## ⚠ CAUTION

***Prolonged exposure to cold and/or vibration can result in injury. Read and follow all safety and operation instructions to minimize risk of injury. Failure to follow instructions can result in painful wrist/hand/arm injuries.***

It is believed that a condition called Raynaud's Phenomenon, which affects the fingers of certain individuals, may be brought about by exposure to vibration and cold. Exposure to vibration and cold may cause tingling and burning sensations, followed by loss of color and numbness in the fingers. The following precautions are strongly recommended, because the minimum exposure, which might trigger the ailment, is unknown.

- Keep your body warm, especially the head, neck, feet, ankles, hands, and wrists.
- Maintain good blood circulation by performing vigorous arm exercises during frequent work breaks, and also by not smoking.
- Limit the hours of operation. Try to fill each day with jobs where operating the unit or other hand-held power equipment is not required.
- If you experience discomfort, redness, and swelling of the fingers followed by whitening and loss of feeling, consult your physician before further exposing yourself to cold and vibration.


© 01/24 ECHO Incorporated

## Repetitive Stress Injuries (RSI)

It is believed that overusing the muscles and tendons of the fingers, hands, arms, and shoulders may cause soreness, swelling, numbness, weakness, and extreme pain in those areas. Certain repetitive hand activities may put you at a high risk for developing a Repetitive Stress Injury (RSI). An extreme RSI condition is Carpal Tunnel Syndrome (CTS), which could occur when your wrist swells and squeezes a vital nerve that runs through the area. Some believe that prolonged exposure to vibration may contribute to CTS. CTS can cause severe pain for months or even years.

To reduce the risk of RSI/CTS, do the following

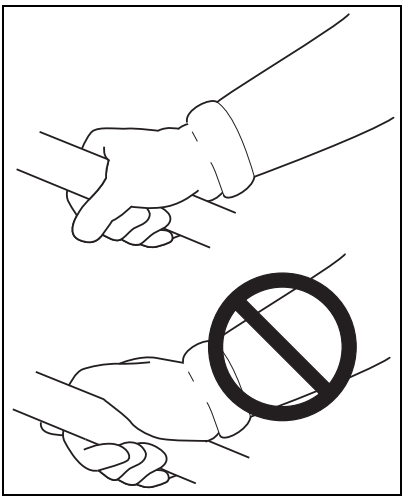

- Avoid using your wrist in a bent, extended, or twisted position. Instead try to maintain a straight wrist position. Also, when grasping, use your whole hand, not just the thumb and index finger.
- Take periodic breaks to minimize repetition and rest your hands.
- Reduce the speed and force with which you do the repetitive movement.
- Do exercises to strengthen the hand and arm muscles.
- Immediately stop using all power equipment and consult a doctor if you feel tingling, numbness, or pain in the fingers, hands, wrists, or arms. The sooner RSI/CTS is diagnosed, the more likely permanent nerve and muscle damage can be prevented.

**⚠ DANGER**

***All over head electrical conductors and communications wires can have electricity flow with high voltages. This unit is not insulated against electrical current. Never touch wires directly or indirectly, otherwise serious injury or death can result.***

**⚠ DANGER**

***Do not operate this product indoors or in inadequately ventilated areas. Engine exhaust contains poisonous emissions and can cause serious injury or death.***


© 01/24 ECHO Incorporated

## Read Manuals

- Provide all users of this equipment with literature for instructions on safe operation.

## Clear the Work Area

- Always clear the work area of foreign objects such as rocks, broken glass, nails, wire, or string, and check for any hidden hazards. Spectators and fellow workers must be warned, and children and animals prevented from coming nearer than 15 m (50 ft.) while the unit is in use.
- Outside the 15 m (50 ft.) zone, there is still a risk of injury from thrown objects.
- Bystanders should be encouraged to wear eye protection.
- If you are approached, stop the engine and cutting attachment.
- When a bladed unit is used, there is the added risk of injury to bystanders being struck with the moving blade in the event of a blade thrust or other unexpected reaction of the blade.

## Keep a Firm Grip

- Always hold throttle handle and support handle with thumbs and fingers tightly encircling the handles.

## Keep a Solid Stance

- Maintain footing and balance at all times. Do not stand on slippery, uneven or unstable surfaces. Do not work in odd positions or on ladders. Do not over reach.
- Keep cutting attachment below waist.
- Keep all body parts away from rotating cutting attachment.

## Avoid Hot Surfaces

- Keep exhaust area clear of flammable debris. Avoid contact during and immediately after operation.

© 01/24 ECHO Incorporated

## Equipment

**WARNING**

***Use only approved attachments. Serious injury may result from the use of a non-approved attachment combination. ECHO Incorporated will not be responsible for the failure of cutting devices, attachments or accessories which have not been tested and approved by ECHO Incorporated. Read and comply with all safety instructions.***

- **Do not attempt to modify this product. Serious injury can result from the use of any modified product.**
- **Check unit for loose or missing nuts, bolts, and screws. Tighten or replace as needed.**
- **Inspect shield for damage and ensure that shield is properly installed, and that the cut-off knife is securely in place. Replace if either is damaged or missing.**
- **Check that the cutting attachment is firmly attached and in safe operating condition.**
- **Manufacturer recommended flexible non-metallic line is installed in the trimmer head.**
- **Assure that throttle trigger, throttle trigger lockout, and stop switch all work properly.**
- **Check that handle and harness (if included) are installed and adjusted for safe, comfortable operation. See Assembly Section for proper adjustment.**

**WARNING**

***Moving parts can amputate fingers or cause severe injuries. Keep hands, clothing and loose objects away from all openings.***

- **ALWAYS stop engine, disconnect spark plug, and make sure all moving parts have come to a complete stop before assembling unit, removing obstructions, clearing debris, or servicing unit.**
- **Do not connect spark plug lead to spark plug until unit is ready for use.**
- **DO NOT start or operate unit unless all guards and protective covers are properly assembled to unit.**
- **NEVER reach into any opening while the engine is running. Moving parts may not be visible through openings.**


© 01/24 ECHO Incorporated

- **Position wiring safely to prevent snagging, separation of connectors, or breakage during operation. Gather excess wire, and secure with wiring clamp if provided on equipment, or tuck behind the air filter area. Do not place wiring directly against hot engine components.**
- **Check wiring and connectors for nicks, cuts, exposed wire, or other damage, and repair or replace as needed. Exposed wire or connectors can cause shocks, sparks, and risk of fire or explosion, resulting in serious injury.**
- **Check wire terminals for secure connections.**

## ⚠ WARNING

***Periodically Check fuel system (fuel lines, vent, grommet, fuel tank, and fuel cap) for leaks especially if the unit is dropped. If damage or leaks are found, do not use unit, otherwise serious personal injury or property damage may occur. Have unit repaired by an authorized servicing dealer before using.***


© 01/24 ECHO Incorporated

# EMISSION CONTROL (EXHAUST & EVAPORATIVE)

## EPA Emissions Control Information

The emission control system for the engine is EM (engine modification) and, if the second to last character of the Engine Family on the Emission Control Information label (see example) is “B”, “C”, “K”, or “T”, the emission control system is EM and TWC (3-way catalyst). The fuel tank/fuel line emission control system is EVAP (evaporative emissions).

**An Emission Control Label** is located on the engine. (This is an EXAMPLE ONLY, information on label varies by engine FAMILY).

### Product Emission Durability (Emission Compliance Period)

The 50 or 300 hour emission compliance period is the time span selected by the manufacturer certifying the engine emissions output meets applicable emissions regulations, provided that approved maintenance procedures are followed as listed in the Maintenance Section of this manual.


© 01/24 ECHO Incorporated

# DESCRIPTION

Locate the safety decal(s) or etching(s) on your unit. Make sure they are legible, and that you understand and follow the instructions. If any cannot be read, replacements can be ordered from your ECHO dealer. Images shown below are for example only. Those on your unit might appear slightly different.

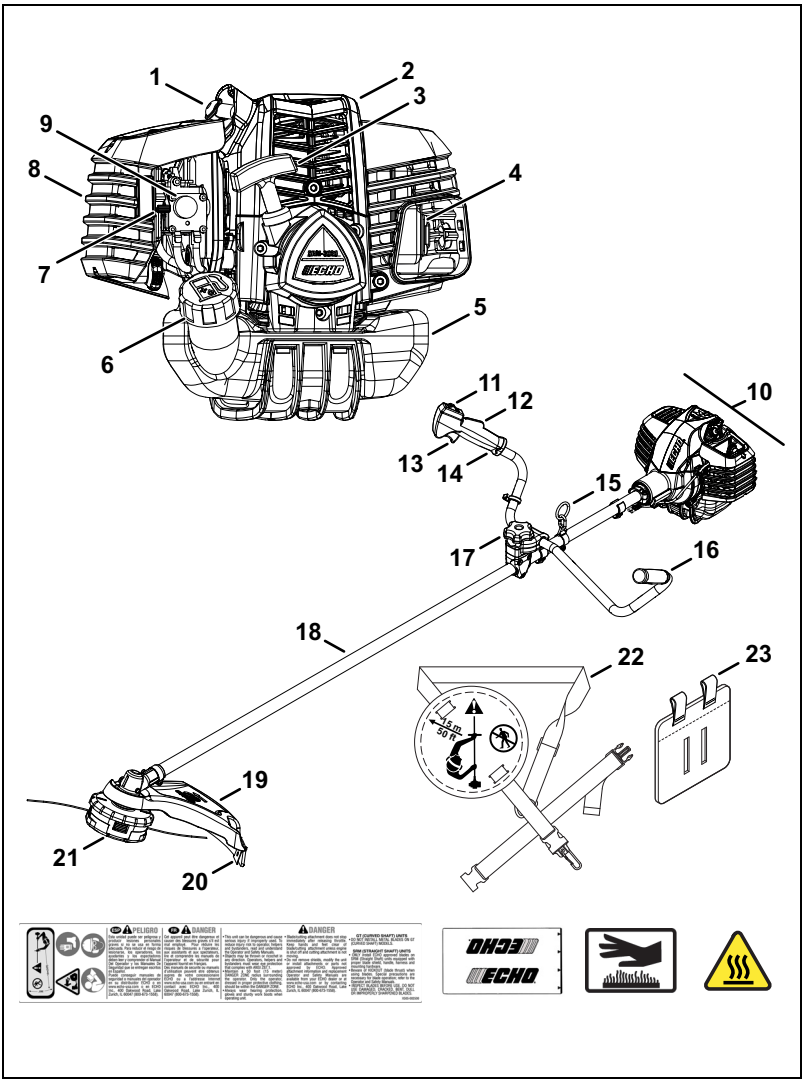



© 01/24 ECHO Incorporated

1. Spark Plug
2. Top Guard
3. Recoil Starter Handle
4. Spark Arrester Muffler or Spark Arrester Muffler with Catalyst
5. Fuel Tank
6. Fuel Tank Cap
7. Choke Lever
8. Air Cleaner
9. Purge Bulb
10. Power Head
11. Stop Switch
12. Throttle Trigger Lockout
13. Throttle Trigger
14. Throttle Handle - For right hand
15. Lifting Ring
16. Support Handle - For left hand
17. Handle Clamp Bolt
18. Drive Shaft Assembly
19. Debris Shield with Cut-off Knife
20. Cut-off Knife
21. Nylon Cutter Head
22. Shoulder Harness
23. Hip Pad


© 01/24 ECHO Incorporated

# CONTENTS

The ECHO product you purchased has been factory pre-assembled for your convenience. Due to packaging restrictions, some assembly may be necessary.

After opening the carton, check for damage. Immediately notify your retailer or ECHO Dealer of damaged or missing parts. Use the contents list to check for missing parts.

| | |
|---|---|
| 1 | Power Head / Drive Shaft Assembly |
| 1 | U-handle Assembly |
| 1 | U-handle Mounting Clamp (lower) |
| 1 | U-handle Mounting Clamp (upper) |
| 1 | U-handle Bolt |
| 1 | Flat Washer |
| 2 | Cable Clips |
| 1 | Shield without Cutoff Knife |
| 3 | Lock Nuts (shield mounting) |
| 1 | Lower Blade Fixing Plate |
| 1 | Large Nut (blade mounting) |
| 1 | Operator’s Manual |
| 1 | Warranty Statement |
| 1 | Shoulder Harness with Hip Pad |
| 2 | Cotter Pins |


© 01/24 ECHO Incorporated

# ASSEMBLY

## U-handle Installation

Parts required: U-handle, upper and lower U-handle clamps, U-handle bolt, flat washer.

1. Install as shown:

   A - U-handle clamps
   B - Drive shaft
   C - Flat washer
   D - U-handle bolt

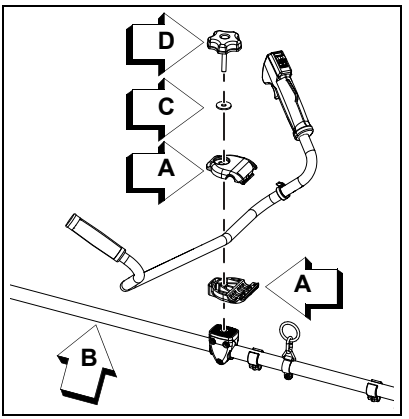


2. Route throttle linkage and ignition lead assembly (E) along shaft and clip as shown.

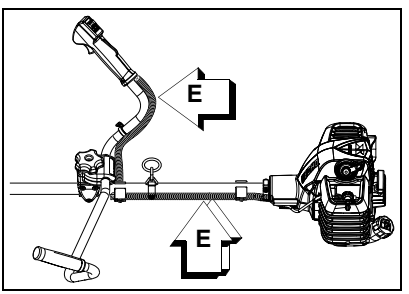



© 01/24 ECHO Incorporated

## Throttle Linkage and Ignition Leads

1. Close choke and remove air filter cover and air filter.
2. Place throttle wire assembly (A) into adjustment fixture (B) and install wire end into large carburetor throttle swivel hole (C).
3. Turn throttle wire retaining clip clockwise to lock into place.
4. Check throttle for freedom of movement. Verify that wide open throttle and low idle extremes are adjusted properly.

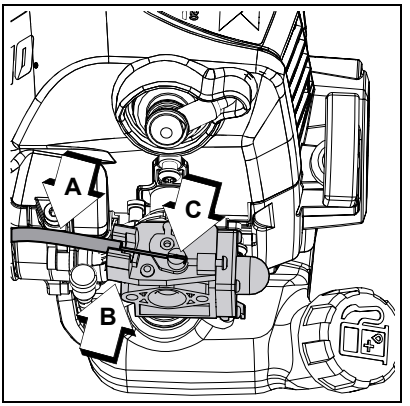


Note: The throttle linkage must be adjusted by moving the adjustment nut. Consult with your dealer for correct adjustment procedure.

5. Connect ignition stop leads (D) from throttle cable assembly to ignition leads (E) on engine.
6. Install air filter and air filter cover.

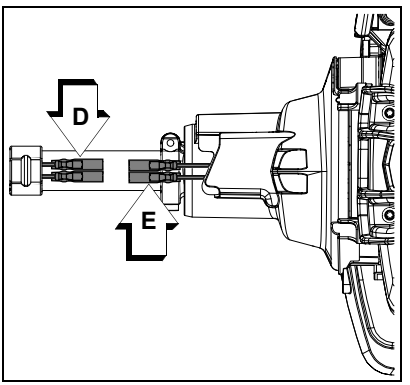



© 01/24 ECHO Incorporated

## Blade Installation

Blades must be selected for type of cutting being performed. See “Blade Selection.”

**WARNING**

***You must install the U-handle and all blade conversion parts shown in the following instructions before operating this unit with a metal blade, otherwise serious injury may result.***

***Shield with cut-off knife is for use with the nylon line head only. Install shield without cut-off knife when using plastic or metal blades, or serious injury may result.***

### Remove Nylon Line Head

1. If installed, remove nylon line head, line head plate, shield plate, and shield with cut-off knife.
   a. Align locking hole in adapter plate with notch in edge of gear case. Insert head locking tool (A).
   b. Remove line head (B) by turning it clockwise until head is completely off of shaft.
   c. Remove locking tool (A) and line head plate.
   d. Remove three screws holding shield plate and shield with cut-off knife to gear housing.
   e. Retain line head, shield plate, and shield with cut-off knife for conversion back to nylon line head operation.

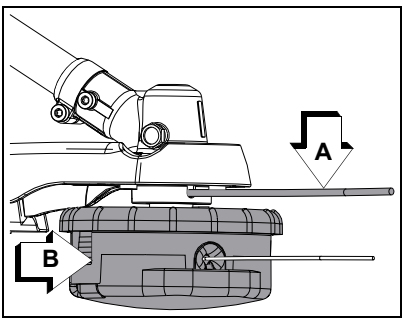



© 01/24 ECHO Incorporated

## Install Blade Shield and Blade

Parts required: shield without cut-off knife, blade (available separately), shield plate, three bolts, three lock nuts.

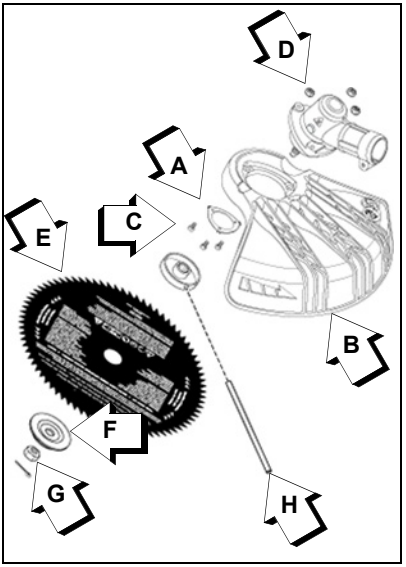


1. Align holes in shield plate (A), shield (B) and bottom of gear case flange. Install three bolts (C) and three lock nuts (D).
2. Tighten all shield hardware.
3. Install upper plate with pilot on splined power take off shaft, pilot side out.
4. Install blade (E) on upper plate pilot. The rotation arrows on the blade must match the rotation arrow shown on the debris shield. Secure blade with lower plate (F), and 10 mm left-hand threaded nut (G). Turn nut counterclockwise on power take off shaft to tighten.
5. Align hole in upper plate with notch in gear housing, and insert a locking tool (H) to prevent splined shaft from turning. Tighten 10 mm nut securely (do not use an impact wrench).
6. Insert a new cotter pin in hole in power take off shaft. Bend pin legs around shaft counterclockwise to retain 10 mm nut. Do not reuse an old cotter pin.
7. Remove locking tool (H).

## Shield with Cut-off Knife and Nylon Line Head Installation

Parts required: shield with cut-off knife, shield plate, three screws, line head plate, nylon line head.

**⚠ WARNING**

***Shield with cut-off knife is for use with the nylon line head only. Install shield without cut-off knife when using plastic or metal blades, or serious injury may result.***


© 01/24 ECHO Incorporated

# CAUTION

***Wear gloves or personal injury may result:***

- ***Cut-off knife is sharp.***
- ***Gear case and surrounding area may be hot.***

# NOTICE

*Semi-automatic nylon line heads must be used only with debris shield with cut-off knife. Using nylon line heads with debris shield without cut-off knife can result in trimmer damage, caused by operation with excessive line length.*

Note: Your nylon line head may appear different than nylon line head shown.

1. Remove blade, blade mounting hardware, and shield without cut-off knife and retain for future use with blade conversions.
2. Align holes in shield (A) and shield plate (B) to bottom of gear case flange. Install three screws.
3. Place line head plate (C) on power take off shaft (D).

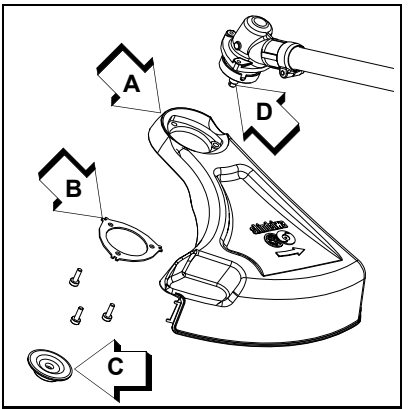


4. Align notch in edge of shield and hole in line head plate with notch in edge of gear housing and insert a locking tool (E).
5. Thread line head (F) onto power take off shaft by turning it counterclockwise until head is tight against line head plate (C).
6. Remove locking tool (E).

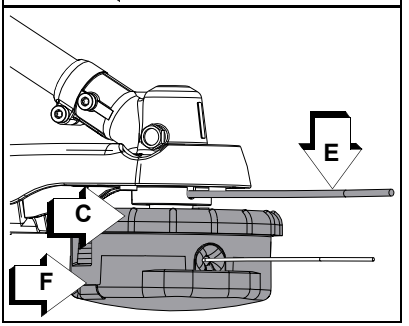



© 01/24 ECHO Incorporated

Advance the trimmer line by tapping the trimmer head against the ground while the head is turning at normal operating speed.

## Balance and Adjust Unit

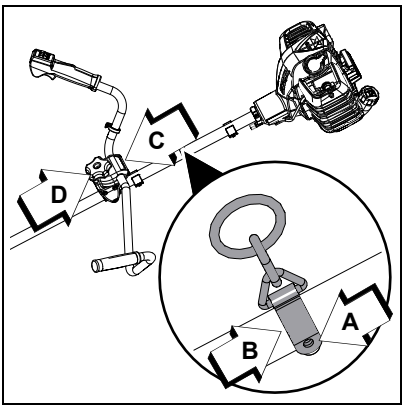


1. Loosen harness clamp screw (A).
2. Put on harness and attach unit to harness.
3. Slide harness clamp (B) up or down until unit balances with head approximately 50-75 mm (2-3 in.) from the ground.
4. Tighten harness clamp screw (A).
5. Loosen U-handle clamp screws (C), and position U-handle for comfortable operation.
6. Tighten U-handle clamp screws (C) and 8 mm clamp hex bolt (D) securely.

# OPERATION

**WARNING**

***Moving parts can amputate fingers or cause severe injuries. Keep hands, clothing and loose objects away from all openings. Always stop engine, disconnect spark plug, and make sure all moving parts have come to a complete stop before removing obstructions, clearing debris, or servicing unit.***

**WARNING**

***Engine exhaust IS HOT, and contains Carbon Monoxide (CO), a poison gas. Breathing CO can cause unconsciousness, serious injury, or death. Exhaust can cause serious burns. ALWAYS position unit so that exhaust is directed away from your face and body.***


© 01/24 ECHO Incorporated

**WARNING**

***Operation of this equipment may create sparks that can start fires around dry vegetation. This unit is equipped with a spark arrester to prevent discharge of hot particles from the engine. Metal cutters can also create sparks if the cutter strikes rocks, metal, or other hard objects. Contact local fire authorities for laws or regulations regarding fire prevention requirements.***

## Operation with Blades

**WARNING**

***Metal blades are very sharp and can cause severe injuries, even if unit is off and blades are not moving. Avoid contact with blades. Wear gloves to protect hands.***

**WARNING**

***Blade use demands specific brushcutter configuration. Operation without specified shield, barrier bar or U-handle, and harness can result in serious personal injury. Follow installation instructions.***

| Pro Maxi-Cut Grass / Weed Blade | Tri-Cut Grass / Weed Blade | Metal Grass / Weed Blade | Metal Brush / Clearing Blades |
|---|---|---|---|
| Support Handle, with or without barrier bar | U-handle or support handle with barrier bar | | U-handle* |
| Shield with cut-off knife | Shield without cut-off knife | | |
| Harness | Harness | | |
| Upper plate/flat washer | Upper / Lower blade plates | | |
| Hex nut | Hex nut | | |
| New cotter pin | New cotter pin | | |

*ANSI standards require brushcutters be equipped with a barrier bar or restrictive harness. U-handle ensures a higher safety factor.


© 01/24 ECHO Incorporated

**WARNING**

***Do Not install blades on GT (Curved Shaft) model trimmers.***

- Use only ECHO approved parts. Failure to use the correct parts can cause the blade to fly off. Serious injury to the operator and/or bystanders can occur.
- Arbor diameter of upper blade plate must match arbor diameter of blades.
- For barrier bar or U-handle, follow instructions supplied with either blade conversion kit or U-handle kit, and verify blade is secured properly.
- A new cotter pin is required each time a blade is installed.
- Shoulder harnesses may be used on all trimmers and brushcutters to reduce operator fatigue. Brushcutters over 7.5 kg (16.5 lbs.) and U-handle brushcutters require a double shoulder harness.

Note: The barrier bar is used to restrict rearward movement of the unit. The barrier bar is not a handle and should not be gripped when using or carrying the unit.

## Blade Selection

**NOTICE**

*Not all blades are compatible with all trimmers. Visit www.echo-usa.com or www.shindaiwa-usa.com to find compatible blades*

**WARNING**

***The type of blade used MUST be matched to the type and size of material cut. An improper or dull blade can cause serious personal injury. Blades MUST be sharp. Dull blades increase the chance of kick-out and injury to yourself and bystanders. Never use an edging blade, circular saw blade, or any other type of unapproved blade.***

**3-Tooth Grass/Weed Blades** may be used wherever the nylon line head is used. DO NOT use this blade for heavy weeds or brush.

**8-Tooth Weed/Grass Blade** is designed for grass, garden debris and thick weeds up to 19 mm (0.75 in.) diameter. DO NOT use this blade for brush or heavy woody growth.

**80-Tooth Brush Blade** is designed for cutting brush and woody growth up to 13 mm (0.5 in.) diameter.


© 01/24 ECHO Incorporated

**22-Tooth Clearing Blade** is designed for dense thickets and saplings up to 64 mm (2.5 in.) diameter.

## ⚠ WARNING

***A trimmer/brushcutter with a metal blade can cause serious injuries if handled improperly.***

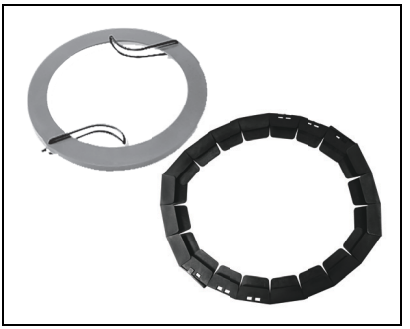

Always use extreme care when carrying or handling the equipment to avoid contact with the cutting edges of the blade. Use the optional blade cover when unit is not in use.

Keep blades in protective packaging until ready to install. Store blades safely after removal to prevent injury from accidental contact.

Use blade protectors to protect blade teeth during unit transportation.

**Use Shoulder/Waist Harness**

Use of the shoulder/waist harness is recommended for all trimmer/brushcutter use, not just blade operation. The shoulder/waist harness when used in a trimming operation with nylon line head suspends the trimmer from the operator's shoulder and reduces operator fatigue.

During blade operation, the same fatigue reduction is achieved. Safety to the operator is also enhanced by reducing the possibility of blade contact with the operator's hands and feet by restricting trimmer movement.

Make sure the warning sign on the back of the shoulder harness can be read easily.

Note: In case of emergency, disconnect the trimmer from the harness.


© 01/24 ECHO Incorporated

## Fuel

**WARNING**

***Diesel fuels and alternative fuels, such as E-15 (15% ethanol), E-85 (85% ethanol) or any fuels not meeting ECHO requirements are NOT approved for use in ECHO 2-stroke gasoline engines. Use of diesel or alternative fuels can cause performance problems, loss of power, overheating, fuel vapor lock, and unintended machine operation, including, but not limited to, improper clutch engagement. Diesel or alternative fuels can also cause premature deterioration of fuel lines, gaskets, carburetors and other engine components.***

### Fuel Requirements

**Gasoline** - Use fresh (purchased within the last 30 days from the pump) 89 Octane [R+M/2] (mid grade or higher) gasoline known to be good quality. Gasoline may contain up to 10% Ethanol (grain alcohol) or 15% MTBE (methyl tertiary-butyl ether). Gasoline containing methanol (wood alcohol) is **NOT** approved. Use of ECHO branded fuel is recommended to extend engine life in all air-cooled 2-stroke and 2/4-stroke hybrid engines.

**Two Stroke Oil** - A two-stroke engine oil, such as ECHO branded 2-stroke oils, meeting ISO-L-EGD (ISO/CD 13738) and J.A.S.O. FD Standards must be used. ECHO branded 2-stroke oils meet these standards. Engine problems due to inadequate lubrication caused by failure to use an ISO-L-EGD (ISO/CD 13738) and J.A.S.O. M345-FD certified oil will void the two-stroke engine warranty.

**WARNING**

***2-Stroke engine oil contains petroleum distillates and other additives that may be harmful if swallowed. Heated oil can release vapors that can cause flash fire, or ignite with explosive force. Read and follow the oil manufacturer's instructions, and observe all safety warnings and precautions for handling flammable liquids. For more detailed safety and first aid information, visit www.echo-usa.com for a copy of the Material Safety Data Sheet.***

- **KEEP OUT OF REACH OF CHILDREN.**
- **If swallowed, do not induce vomiting. CALL PHYSICIAN OR A POISON CONTROL CENTER IMMEDIATELY.**
- **WEAR SAFETY GLASSES when mixing or handling.**


© 01/24 ECHO Incorporated

- **AVOID repeated or prolonged skin contact.**
- **AVOID inhaling oil mists or vapors.**

**NOTICE**

*ECHO branded 2-stroke oils may be mixed at 50:1 ratio for application in all ECHO engines sold in the past regardless of ratio specified in those manuals.*

### Handling Fuel

**DANGER**

***Fuel is VERY flammable. Use extreme care when mixing, storing or handling, or serious personal injury will result.***

- ***Use an approved fuel container. Mark fuel containers as containing 2-stroke mixture fuel.***
- ***DO NOT smoke near fuel.***
- ***DO NOT allow flames or sparks near fuel.***
- ***Fuel tanks/cans may be under pressure. Always loosen fuel caps slowly allowing pressure to equalize.***
- ***NEVER refuel a unit when the engine is HOT or RUNNING!***
- ***DO NOT fill fuel tanks indoors. ALWAYS fill fuel tanks outdoors over bare ground.***
- ***DO NOT overfill fuel tank. Wipe up spills immediately.***
- ***Securely tighten fuel tank cap and close fuel container after refueling.***
- ***Inspect for fuel leakage. If fuel leakage is found, do not start or operate unit until leakage is repaired.***
- ***Use caution when handling fuel. Mix and pour fuel outdoors where there are no sparks and flames. Slowly remove the fuel cap only after stopping the engine and allowing the unit to cool. Do not smoke while fueling or mixing fuel. Move the unit at least 10 feet (3 m) from the fueling point before starting the engine.***


© 01/24 ECHO Incorporated

## DANGER

***Gasoline vapor is heavier than air, and can travel along the ground to nearby sources of ignition such as electrical motors, pilot lights, and hot or running engines. Vapors ignited by an ignition source can flash back to the fuel container, resulting in an explosion, fire, serious or fatal injuries, and extensive property damage.***

***Mixing Instructions***

## NOTICE

*Stored fuel ages. Do not mix more fuel than you expect to use in 30 days, 90 days when a fuel stabilizer is added.*

1. Fill an approved fuel container with half of the required amount of gasoline.
2. Add the proper amount of 2-stroke oil to gasoline.
3. Close container and shake to mix oil with gasoline.
4. Add remaining gasoline, close fuel container, and remix.

| Fuel to Oil Mix – 50:1 Ratio | | | |
|---|---|---|---|
| US | | Metric | |
| Gas | Oil | Gas | Oil |
| gal. | fl.oz. | L | cc |
| 1 | 2.6 | 5 | 100 |
| 2 | 5.2 | 10 | 200 |
| 5 | 13 | 25 | 500 |

## NOTICE

*Spilled fuel is a leading cause of hydrocarbon emissions. Some locations may require the use of automatic fuel shut-off containers to reduce fuel spillage.*

**Storage** - Fuel storage laws vary by locality. Contact your local government for the laws affecting your area. As a precaution, store fuel in an approved, airtight container. Store in a well-ventilated, unoccupied building, away from sparks and flames.

- Empty the fuel tank prior to storing the unit. Return unused fuel to an approved fuel storage container.

## NOTICE

*Stored two-stroke fuel can separate. ALWAYS shake fuel container thoroughly before each use.*


© 01/24 ECHO Incorporated

## NOTICE

*Used oil and gasoline, and soiled towels are hazardous waste materials. Disposal laws vary by locality.*

## Starting Cold Engine

## WARNING

***The attachment will operate immediately when the engine starts, and could result in possible serious injury. Keep movable parts of the attachment away from objects that could become entangled or thrown, and surfaces that could cause loss of control.***

1. *Stop Switch*

   Move stop switch button (A) forward, away from the STOP position.

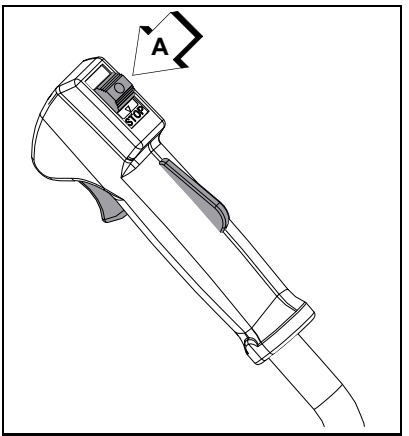


2. *Choke*

   Move choke lever (B) to COLD START position.

3. *Purge Bulb*

   Pump purge bulb (C) until fuel is visible and flows freely in the clear fuel tank return line. Pump bulb an additional four or five times.

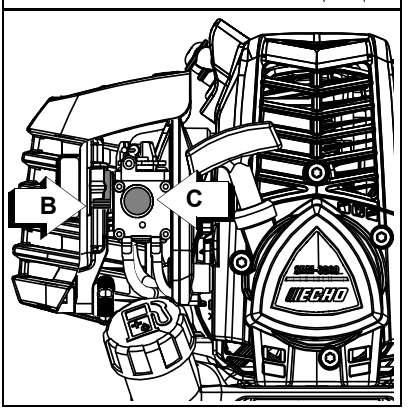



© 01/24 ECHO Incorporated

Note: Lightly place knee on drive shaft to stabilize unit during starting. Do not apply excessive downward force or damage to unit can occur.

4. *Recoil Starter*

   Lay the unit on a flat area and keep movable attachment parts clear of all obstacles. Firmly grasp throttle handle and throttle trigger lockout with left hand and fully depress throttle trigger to wide open position. Rapidly pull recoil starter handle/rope (D) until engine fires (or maximum five pulls).

5. *Choke*

   After engine fires (or five pulls), move choke lever back to RUN position. Firmly grasp throttle handle (E) and throttle trigger lockout with left hand and fully depress throttle trigger to wide open position. Pull recoil starter handle until engine starts and runs. Release throttle trigger, and allow unit to warm up at idle for several minutes.

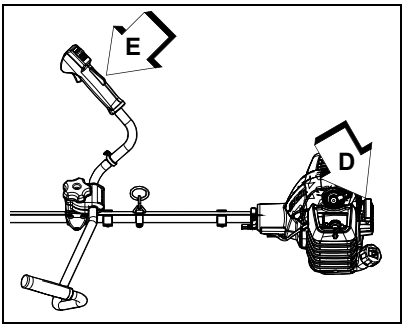


Note: If engine does not start with choke in “RUN” position after five pulls, repeat instructions 2 - 5.

6. *Throttle Trigger*

   After engine warm-up, grip throttle handle and support handle. Depress the throttle trigger lockout, and gradually depress throttle trigger to increase engine RPM to operating speed.


© 01/24 ECHO Incorporated

## Starting Warm Engine

The starting procedure is the same as Cold Start except DO NOT close the choke, and do not hold throttle trigger fully depressed.

**WARNING**

***The attachment should not move at idle, otherwise serious personal injury may result.***

Note: If attachment moves, readjust carburetor according to “Carburetor Adjustment” instructions in this manual or see your ECHO Dealer.

1. *Stop Switch*

   Move stop switch button (A) forward away from the STOP position.

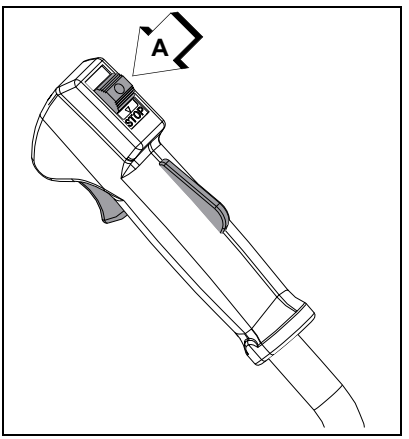


2. *Purge Bulb*

   Pump purge bulb (C) until fuel is visible in the “Clear” fuel return line.

Note: Lightly place knee on drive shaft to stabilize unit during starting. Do not apply excessive downward force or damage to unit can occur.

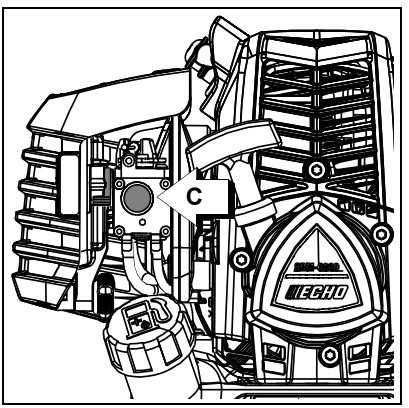



© 01/24 ECHO Incorporated

3. *Recoil Starter*

   Lay the unit on a flat area and keep movable attachment parts clear of all obstacles. Firmly grip throttle handle (E) and throttle trigger lockout with left hand. Rapidly pull recoil starter handle/rope (D) until engine fires.

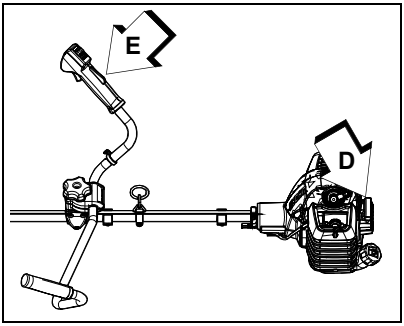


Note: If engine does not start after five pulls, use Cold Start Procedure.

## Stopping Engine

1. *Throttle*

   Release throttle trigger and allow engine to return to idle before shutting off engine.

2. *Stop Switch*

   Move stop switch button (A) backward to STOP position.

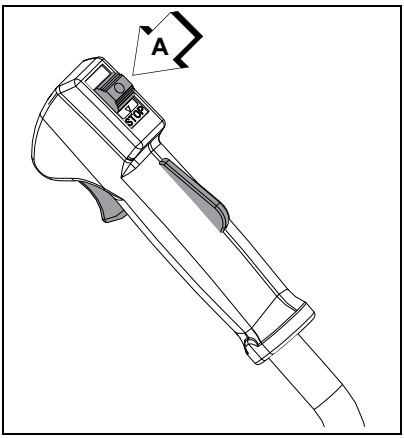


**WARNING**

***If engine does not stop when stop switch is moved to STOP position, close choke - COLD START position - to stall engine. Have your ECHO dealer repair stop switch before using unit again.***


© 01/24 ECHO Incorporated

## Applications

**WARNING**

***Always hold throttle handle with right hand and support handle with left hand, placing unit on right side of body.***

**WARNING**

***Do not install blades on GT (Curved Shaft) trimmers.***

## Operating Techniques - Nylon Line Head

Nylon line heads may be used for trimming, scything, edging, and scalping of grass and light weeds.

**NOTICE**

*Units with Speed Feed® line heads ONLY: To advance trimmer line, tap trimmer head against the ground while the head is turning at normal operating speed.*

### Trimming

Feed the spinning line into the material to be cut. Tilt the line head to one side to direct cutting debris away from you:

- Model SRM/DSRM/PAS/DPAS/SB/TX/C/T (Straight shaft, counter-clockwise line head rotation) - Tilt the cutting head down on the right side while cutting to direct cutting debris away from operator. Feed the line gradually into the material you wish to cut, avoiding contact with fences or other barriers.
- GT models: Tilt cutting head to the left while cutting to direct debris away from the operator.

### Scything

Scything - Swing the cutting head in a level arc, gradually feeding the line into the material being cut. Move forward with each arc to cut a swath. Width of cutting swath depends on arc. Use a larger arc for a wider swath, or a smaller arc for a narrow swath. Keep line head tilted to direct cutting debris forward or away from you.


© 01/24 ECHO Incorporated

### Edging and Scalping

Both of these are done with the nylon line cutting head tilted at a steep angle. Scalping is removing top growth, leaving the earth bare. Edging is trimming the grass back where it has spread over a pavement or driveway. During both edging and scalping, hold the unit at a steep angle in a position where the debris, and any dislodged dirt and stone, will not come back towards you even if it ricochets off the hard surface.

### General

- Debris flows in direction of line head rotation. Change line head position to assure debris flow is directed away from operator.
- Keep cutting line away from wire fences to avoid entanglement.
- Operate trimmer only with cutting head below knee height.

## Operating Techniques - Metal or Plastic Blade

Brushcutter blades may be used to cut and trim a wide variety of materials. Refer to the blade selection section for determining the correct blade for the application.

### Scything (3, 8, and 80 tooth weed/grass, and brush blades)

- To cut large sections of field grass and weeds swing the cutting head in a level arc, gradually feeding the blade into the material being cut. Adjust throttle speed according to your work.
- Do not swing the main pipe with arms. Turn hips to swing the blade horizontally from right to left, and cut weeds on the left side of the blade.
- Do not scythe back and forth as the grass may scatter and kickback may occur easily.
- Tilt blade left by 5 to 10 degrees so that cut grasses will push left, making progress easier.
- Move forward with each arc to cut a swath.

© 01/24 ECHO Incorporated

- Width of cutting swath depends on arc. Use a larger arc for a wider swath, or a smaller arc for a narrow swath. Suggested cutting width is about 1.5 m (4.9 ft).
- When scything large brush up to 12.7 mm (0.5 in.) diameter from right to left, avoid cutting with highlighted section.

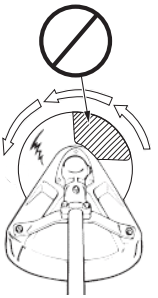

## Reaction Forces

**WARNING**

- **The cutting attachment will continue to rotate even after the throttle is released, maintain control of the unit until it has come to a complete stop.**
- **Blade thrust may occur when the spinning blade contacts an object that it does not immediately cut. Following proper cutting techniques will prevent blade thrust.**
- **Blade thrust can be violent enough to cause the unit and/or operator to be propelled in any direction, and possibly lose control of the unit.**
- **Blade thrust can occur without warning if the blade snags, stalls or binds.**
- **Blade thrust is more likely to occur in areas where it is difficult to see the material being cut.**

### Push or Pull - Kickout

During normal use, operating a brushcutter with a circular metal blade can produce sudden strong reaction forces that are difficult to control. Strong reaction forces can cause a loss of balance or loss of control of the equipment, resulting in serious injury to operator and bystanders.

Understanding what causes these reactive forces may help you to avoid them, and can help you to maintain control of the equipment if you experience a sudden reaction during cutting. Reactive forces occur when the force being applied by the cutting teeth of a blade meet resistance, and some of the cutting force is directed back toward the equipment. The greater the cutting force or the amount of resistance, the greater the reactive force.


© 01/24 ECHO Incorporated

## Push and Pull Forces

Push and pull forces are reactive forces that push the equipment directly toward the operator, or that pull the equipment directly away from the operator. These forces are the result of cutting on the sides of the blade. The direction of the force depends on the side of the blade being used, and the direction of blade rotation at the point of contact. The reactive force is in the opposite direction of blade rotation at the contact point, regardless of where the contact is being made. These types of reactive forces are also called “Blade Thrust.”

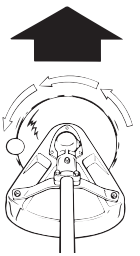

As shown in the illustration, a blade turning counterclockwise will cause the equipment to pull away from the operator if the point of cutting resistance is on the left side of the blade. If the point of cutting resistance is on the right side of the blade, the equipment will push back toward the operator. In both examples, the reactive force is in the opposite direction of blade rotation at the contact point where resistance occurs.

## Kickout

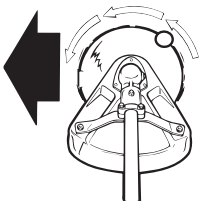

Kickout is also a reactive force caused by resistance to cutting, but the direction of blade thrust is lateral (to the left or right of the blade), instead of forward or back toward the operator. In most cases, Push, Pull, and Kickout can be reduced or eliminated by:

- Using the correct blade for the cutting job
- Using properly sharpened blades
- Applying consistent, even force to the blade during the cut
- Avoiding obstacles and ground hazards
- Using extra care when cutting harder materials such as extremely dry brush, saplings, and small trees
- Cutting from a stable, secure position

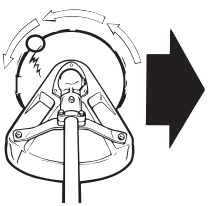


© 01/24 ECHO Incorporated

## Blade Cutting Problems

Binding - Blades may bind in the cut if dull or forced. Binding can damage blade, and result in blade breakage or injury from fragments and flying debris. If a blade binds in a cut, don't try to get it out by applying "up and down" force to pry the cut open. Applying prying force to the blade can bend the blade, and result in blade failure and injury.

To free a blade that is bound in the cut, stop the unit, and support the trimmer or brushcutter to keep stress off the blade. Push the tree away from the entry point of the cut to open the cut, and pull the blade directly away from the cut in a straight-line motion. Use caution when releasing the tree to avoid being struck by spring-back or falling.

Inspect the blade for damage before proceeding. Sharpen teeth if dull, or replace blade if cracked, bent, missing teeth, or otherwise damaged.

To prevent binding:

- Keep blades sharp
- Avoid excessive pressure during cuts
- Don't exceed cutting capacity of blade
- Don't use blades with damaged or missing cutting teeth
- Don't rock blades in cut


© 01/24 ECHO Incorporated

# MAINTENANCE

**WARNING**

***Moving parts can amputate fingers or cause severe injuries. Keep hands, clothing and loose objects away from all openings. Always stop engine, disconnect spark plug, and make sure all moving parts have come to a complete stop before removing obstructions, clearing debris, or servicing unit. Allow the unit to cool before performing maintenance or adjustments. Wear gloves to protect hands from sharp edges and hot surfaces.***

**WARNING**

***Operating a poorly maintained unit can result in serious injuries to operator or bystanders. Always follow all maintenance instructions as written, otherwise serious personal injury can result.***

Your unit is designed to provide many hours of trouble free service. Regular scheduled maintenance will help your unit achieve that goal. If you are unsure or are not equipped with the necessary tools, we recommend that you take your unit to a Servicing Dealer for maintenance. To help you decide whether you want to DO-IT-YOURSELF or have the Dealer do it, each maintenance task has been graded. If the task is not listed, see your Dealer for repairs.

**NOTICE**

*The use of emission control components other than those specifically designed for this unit is a violation of federal law.*

## Skill Levels

**Level 1** = Easy to do. Common tools may be required.

**Level 2** = Moderate difficulty. Some specialized tools may be required.

**Level 3** = See your dealer.

Click HERE or go to http://www.echo-usa.com/products/maintenance-kit

or

HERE https://www.shindaiwa-usa.com/you-can.aspx


© 01/24 ECHO Incorporated

## Maintenance Intervals

| COMPONENT / SYSTEM | MAINTENANCE PROCEDURE | SKILL LEVEL |
|---|---|---|
| **Daily or Before Use** | | |
| Air Filter | Inspect / Clean* | **1** |
| Choke Shutter | | |
| Fuel System | Inspect[3] | |
| Cooling System | Inspect / Clean | **2** |
| Recoil Starter Rope | Inspect / Clean* | **1** |
| Screws / Nuts / Bolts | Inspect / Tighten / Replace* | |
| Blade | Inspect / Replace* | 1 |
| **Every Refuel** | | |
| Fuel System | Inspect[3] | **1** |
| **3 Months** | | |
| Air Filter | Replace* | **1** |
| Fuel Filter | Inspect* | |
| Fuel Cap Gasket | | |
| Spark Plug | Inspect / Clean / Replace* | |
| Muffler Spark Arrester | | **2** |
| Cylinder Exhaust Port | Inspect / Clean / De-carbon | |
| Drive Shaft (flex cable models) | Grease[1] | |
| Gear Housing (some models) | Grease[2] | |
| **Yearly** | | |
| Fuel Filter | Inspect / Replace* | **1** |
| Fuel Cap Gasket | Replace* | |

**IMPORTANT NOTE** - Time intervals shown are maximum. Actual use and your experience will determine the frequency of required maintenance.

**MAINTENANCE PROCEDURE NOTES:**

[1] Apply lithium-based grease every 25 hours of use.

[2] Apply lithium-based grease every 50 hours of use.


© 01/24 ECHO Incorporated

[3] Low evaporative fuel tanks DO NOT require regular maintenance to maintain emission integrity.

* Replacement is recommended based on the finding of damage or wear during inspection.

## Air Filter

**Level 1**

Parts required: Tune Up Kit.

1. Close choke (COLD START position). This prevents dirt from entering the carburetor throat when the air filter is removed. Brush accumulated dirt from air cleaner area.
2. Remove air filter cover. Brush dirt from inside cover.

**NOTICE**

*Assure throttle wire retaining clip (A) remains in place as shown when removing or installing air filter cover.*

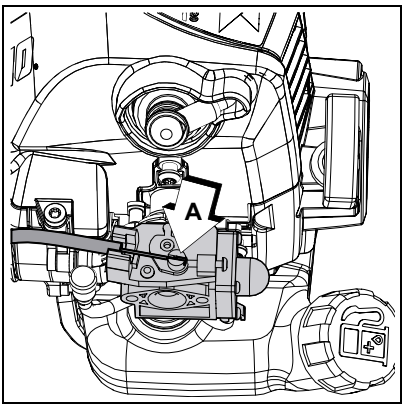


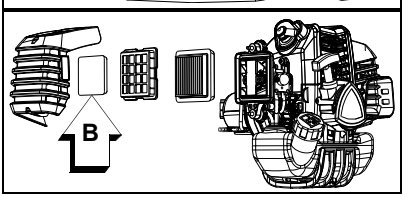


3. Remove foam pre-filter (B) and air filter and clean as indicated below:
4. Foam Pre-filter.
   - Clean foam filter in water/ detergent solution and rinse with clean water.
   - Wrap the filter in a clean, dry cloth and squeeze (do not wring) dry. Allow to dry completely before reuse. Do not oil.

   Air Filter

   - Lightly brush debris from filter. Replace filter if it is damaged, fuel soaked, very dirty, or the rubber sealing edges are deformed.
5. Assemble components in reverse order.


© 01/24 ECHO Incorporated

**NOTICE**

*Assure air filter is assembled with pleats oriented vertically.*

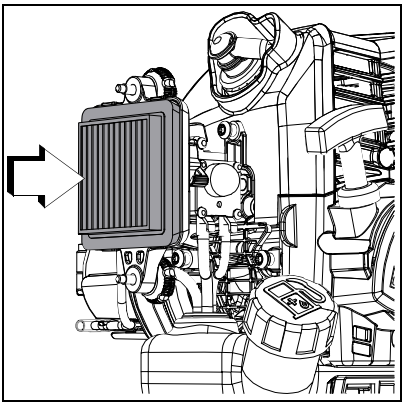

## Fuel Filter

**Level 1.**

Parts required: Tune Up Kit.

**DANGER**

***Fuel is VERY flammable. Use extreme care when mixing, storing or handling, or serious personal injury may result.***

1. Use a clean rag to remove loose dirt from around fuel cap and empty fuel tank.
2. Pull fuel filter out through gas port, and inspect fuel filter.
3. When the fuel filter is dirty, replace it as follows:
   a. Do not remove the wire coil clamp to remove the fuel filter. Pinch the fuel filter with the fingers on one hand and the fuel line with the other hand. Pull and twist slightly to separate.
   b. Install the new fuel filter with the reverse action.

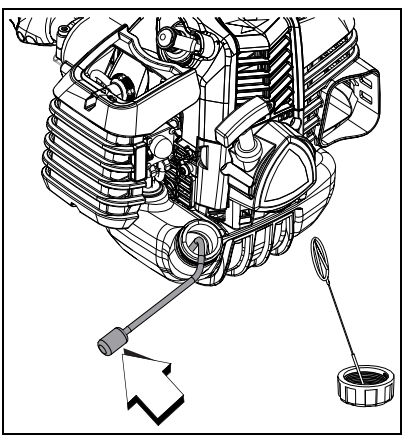


© 01/24 ECHO Incorporated

c. When the inside of the fuel tank is dirty, rinse the tank out with gasoline to clean it.

Note: Federal EPA regulations require all model year 2012 and later gasoline powered engines produced for sale in the United States to be equipped with a special low permeation fuel supply hose between the carburetor and fuel tank. When servicing model year 2012 and later equipment, only fuel supply hoses certified by EPA can be used to replace the original equipment supply hose. Fines up to $37,500 may be enforced for using an un-certified replacement part.

## Spark Plug

**Level 2.**

Parts required: Tune Up Kit.

**NOTICE**

*Use only NGK CMR7H spark plug otherwise severe engine damage may occur.*

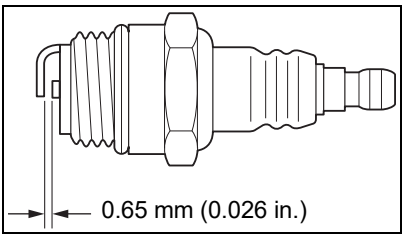


1. Remove spark plug and check for fouling, worn and rounded center electrode.
2. Clean the plug or replace with a new one. DO NOT sand blast to clean. Remaining sand will damage engine.
3. Adjust spark plug gap by bending outer electrode.
4. Tighten spark plug to 102-153 kgf•cm (89-133 lbf•in).


© 01/24 ECHO Incorporated

## Cooling System

**Level 2.**

**NOTICE**

*To maintain proper engine operating temperatures, cooling air must pass freely through the cylinder fin area. This flow of air carries combustion heat away from the engine.*

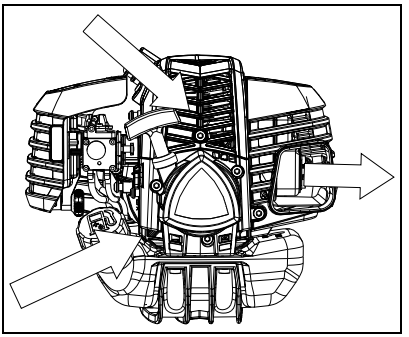

Overheating and engine seizure can occur when:

- Air intakes are blocked, preventing cooling air from reaching the cylinder.
- Dust and grass build up on the outside of the cylinder. This build up insulates the engine and prevents the heat from leaving.

Removal of cooling passage blockages or cleaning of cooling fins is considered “Normal Maintenance.” Any failure attributed to lack of maintenance is not warranted.

1. Remove spark plug lead.
2. Remove muffler cover (A).
3. Remove engine cover (B).

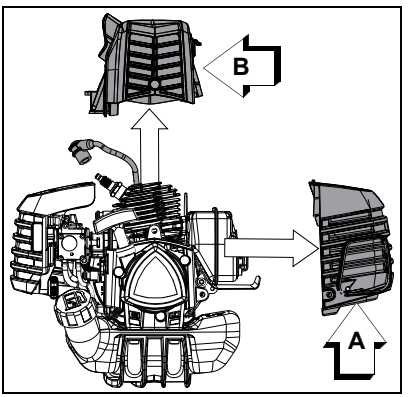


**NOTICE**

*DO NOT use a metal scraper to remove dirt from the cylinder fins.*

4. Use brush to remove dirt from the cylinder fins.


© 01/24 ECHO Incorporated

5. Remove grass and leaves from the grid (C) between the recoil starter and fuel tank.
6. Assemble components in reverse order.

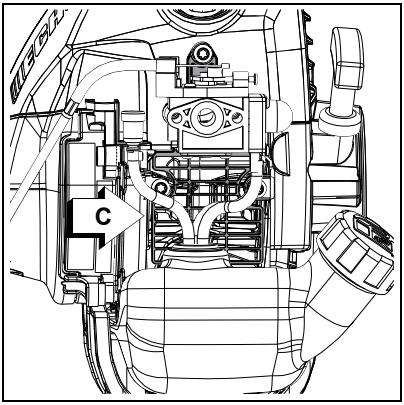


# Exhaust System

## Spark Arrester Screen

**Level 2.**

Parts required: Spark Arrester Screen, Gasket.

1. Remove spark plug lead.
2. Remove muffler cover (A).
3. Place piston at Top Dead Center (TDC) to prevent carbon or dirt from entering cylinder.
4. Remove spark arrestor screen cover (B), gasket (C), and screen (D), from muffler body.
5. Clean carbon deposits from muffler components.

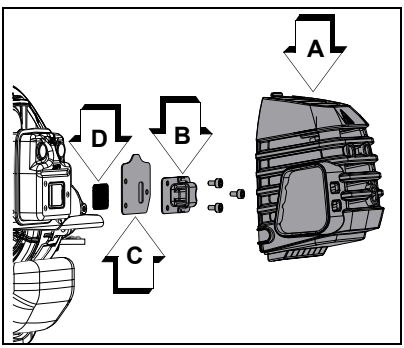


Note: When cleaning carbon deposit, be careful not to damage the catalytic element inside muffler.

6. Replace screen if it is cracked, plugged, or has holes burned through.
7. Assemble components in reverse order.


© 01/24 ECHO Incorporated

## Exhaust Port Cleaning

**Level 2.**

Parts needed: Heat Shield (as required).

**NOTICE**

*Never use a metal tool to scrape carbon from the exhaust port. Do not scratch the cylinder or piston when cleaning the exhaust port. Do not allow carbon particles to enter the cylinder.*

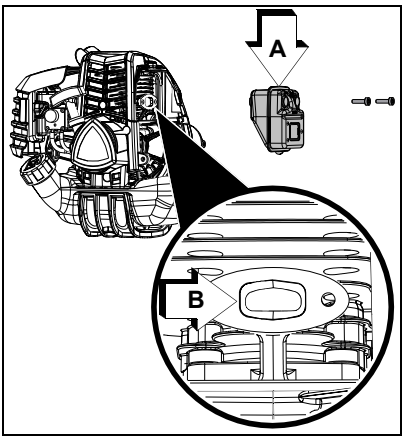


1. Remove spark plug lead from spark plug, and remove muffler cover.
2. Place piston at top dead center. Remove muffler (A).
3. Use a wood or plastic scraping tool to clean deposits from cylinder exhaust port (B).
4. Inspect heat shield, and replace if damaged.
5. Install heat shield and muffler.
6. Tighten muffler mounting bolts (or nuts) to 90-110 kgf•cm (80-95 lbf•in).
7. Install muffler cover and attach spark plug lead.
8. Start engine, and warm to operating temperature.
9. Stop engine, and re-tighten mounting bolts (or nuts) to specifications.


© 01/24 ECHO Incorporated

## Carburetor Adjustment

**Level 2.**

**WARNING**

***When carburetor adjustment is completed, the cutting attachment should not move at idle, otherwise serious personal injury may result.***

### Engine Break-In

New engines must be operated a minimum duration of two tanks of fuel break-in before carburetor adjustments can be made. During the break-in period your engine performance will increase and exhaust emissions will stabilize. Idle speed can be adjusted as required.

### High Altitude Operation

This engine has been factory adjusted to maintain satisfactory starting, and durability performance up to 335 m (1,100 ft.) above sea level (ASL) (96.0 kPa). To maintain proper engine operation above 335 m (1,100 ft.) ASL the carburetor may need to be adjusted by an authorized service dealer.

**NOTICE**

*If the engine is adjusted for operation above 335 m (1,100 ft.) ASL, the carburetor must be re-adjusted when operating the engine below 335 m (1,100 ft.) ASL, otherwise severe engine damage may result.*

Note: Every unit is run at the factory and the carburetor is set in compliance with emission regulations. Carburetor adjustments, other than idle speed, must be performed by an authorized dealer.


© 01/24 ECHO Incorporated

1. Check idle speed and reset if necessary. If a tachometer is available, idle speed screw (A) should be set to the specifications found on “Specifications” page of this manual. Turn idle screw (A) clockwise to increase idle speed; counterclockwise to decrease idle speed.

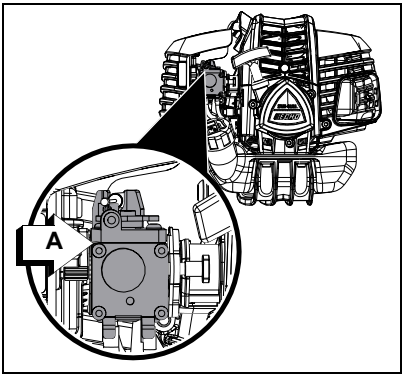


## Lubrication

**Level 1.**

Parts required: Lithium-based grease.

### Gear Case

**NOTICE**

*Gear cases without grease plug (A) do not require lubrication.*

1. Clean all loose debris from gear case.
2. Remove plug (A) and check level of grease.
3. Add grease if necessary. DO NOT over-fill.

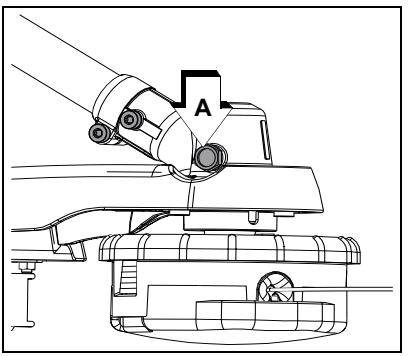



© 01/24 ECHO Incorporated

### Drive Shaft (flex cable only)

1. Loosen screw (B) and remove locating screw (C). Pull gear case and shield from drive shaft housing.

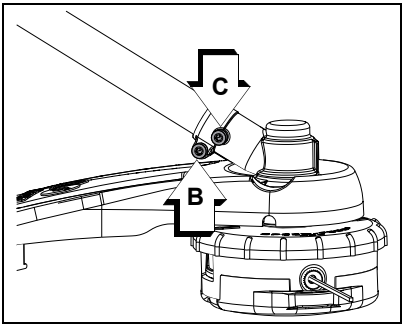


2. Pull flexible cable (D) from the drive shaft housing, wipe clean and re-coat with 15 ml (0.5 oz.) of grease.
3. Slide the flexible cable (D) back in the drive housing. DO NOT get dirt on the flex cable.
4. Install the gear housing and shield assembly.

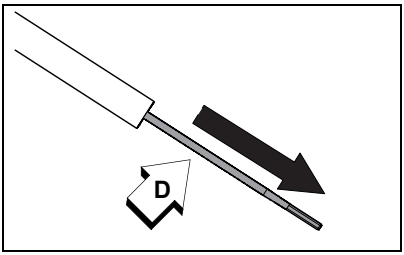


## Nylon Line Head Disassembly Instructions

Note: For normal use, Speed Feed® head disassembly is not necessary. However, if circumstances require disassembly, follow these instructions.

1. Press top of locking tabs (A) on both sides of Speed Feed® head to release cover (B) from knob (C).
2. Remove cover from knob.

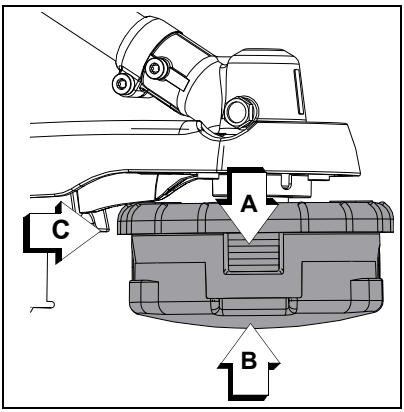



© 01/24 ECHO Incorporated

## Nylon Line Replacement

**CAUTION**

***Wear gloves or personal injury may result:***

- ***Cut-off knife is sharp.***
- ***Gear case and surrounding area may be hot.***

1. Cut one piece of line to recommended length:
   - 2.0 mm (0.080 in.) diameter, 7.6 m (25 ft.)
   - 2.4 mm (0.095 in.) diameter, 7.6 m (25 ft.)

2. Align arrows on top of knob with openings in eyelets.

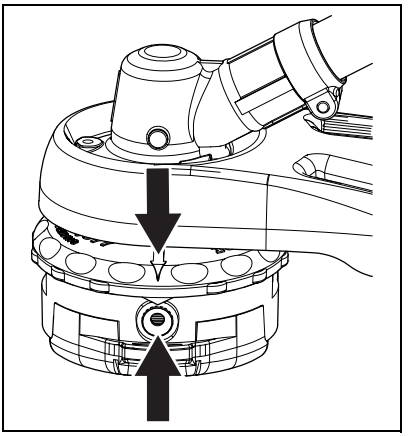

3. Insert one end of trimmer line into an eyelet, and push line equal distance through trimmer head.

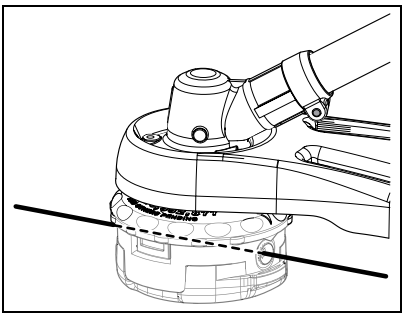


© 01/24 ECHO Incorporated

4. Hold trimmer head while turning knob clockwise to wind line onto spool until about 13 cm (5 in.) of each line remains exposed.

**Trimmer head is now fully loaded and ready for operation.**

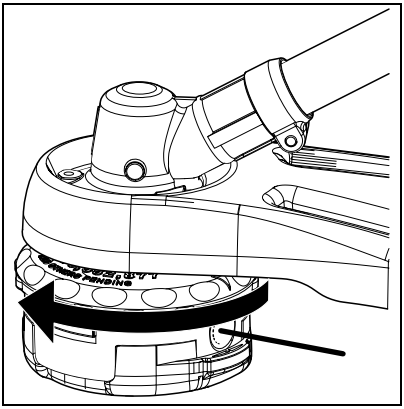

# NOTICE

*When the wear indicators located at the bottom of the Speed-Feed® head are worn smooth, or if holes appear, replacement of the cover or the entire Speed-Feed® head is required.*

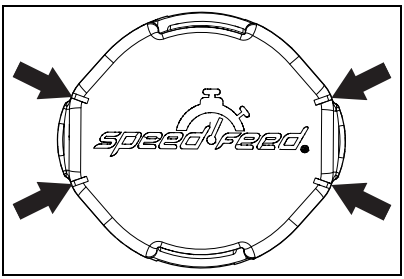


**HDFH line head requires no maintenance.**


© 01/24 ECHO Incorporated

## Sharpening Metal Blades

**WARNING**

***Metal blades are very sharp and can cause severe injuries, even if unit is off and blades are not moving. Avoid contact with blades. Wear gloves to protect hands.***

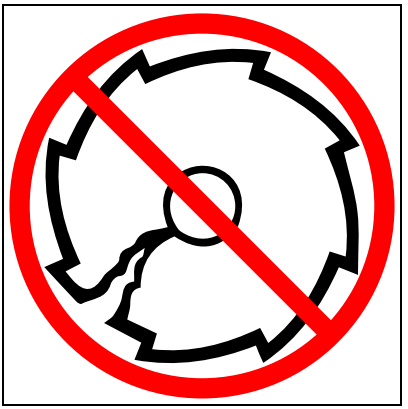

Several styles of metal blades are approved for use on the Brushcutter. The 8-tooth blade can be sharpened during normal maintenance. The clearing blade and 80-tooth blade require professional service.

Before sharpening, CLOSELY inspect blade for cracks (look at the bottom of each tooth and the center mounting hole closely), missing teeth and bending. If ANY of these problems are discovered, replace the blade.

When sharpening a blade, always remove the same amount of materials from each tooth to maintain balance. A blade that is not balanced will cause unsafe handling due to vibration and can result in blade failure.

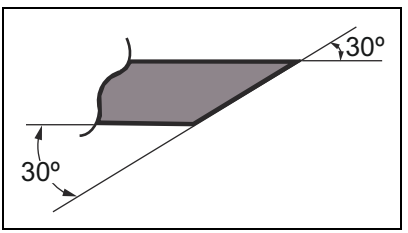


1. File each tooth at a 30° angle a specific number of times, e.g., four strokes per tooth. Work your way around the blade until all teeth are sharp.
2. DO NOT file the ‘gullet’ (radius) of the tooth with the flat file. The radius must remain. A sharp corner will lead to a crack and blade failure.

**NOTICE**

*If an electric grinder is used, use care not to overheat teeth, do not allow tips/tooth to glow red or turn blue. DO NOT place blade in cooling water. This will change the temper of the blade and could result in blade failure.*


© 01/24 ECHO Incorporated

3. After sharpening teeth, check each tooth radius for evidence of a square (sharp) corner. Use the round (rat tail) file to renew the radius.

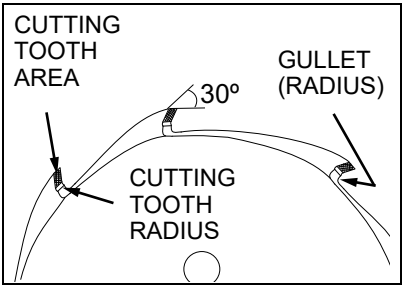


# TROUBLESHOOTING

| ENGINE PROBLEM TROUBLESHOOTING CHART | | | | |
|---|---|---|---|---|
| **Problem** | **Check** | **Status** | **Cause** | **Remedy** |
| Engine starts hard<br><br>or<br><br>Engine does not start | Fuel at carburetor | No fuel at carburetor | Fuel strainer or fuel line obstructed | Clean or replace<br><br>See your dealer |
| | Fuel at cylinder | No fuel at cylinder | Carburetor | See your dealer |
| | | Muffler wet with fuel | Fuel mixture too rich | OPEN choke<br><br>Clean or replace air filter<br><br>Adjust carburetor<br><br>See your dealer |
| | Spark at end of plug wire | No spark | STOP switch OFF - Electrical problem - Interlock switch | Turn switch to ON<br><br>See your dealer |
| | Spark at plug | | Incorrect gap - Covered with carbon - Fouled with fuel - Plug defective | Adjust to 0.65 mm (0.026 in.)<br><br>Clean or replace plug |


© 01/24 ECHO Incorporated

| ENGINE PROBLEM TROUBLESHOOTING CHART | | | | |
|---|---|---|---|---|
| **Problem** | **Check** | **Status** | **Cause** | **Remedy** |
| Engine runs, but dies<br>or<br>Engine does not accelerate properly | Air filter | Air filter dirty | Normal wear | Clean or replace |
| | Fuel filter | Fuel filter dirty | Contaminants or residue in fuel | Replace filter or replace fuel |
| | Fuel vent | Fuel vent plugged | Contaminated fuel | Clean or replace |
| Engine runs, but dies<br>or<br>Engine does not accelerate properly | Spark plug | Plug dirty or worn | Normal wear | Clean and adjust or replace |
| | Carburetor | Improper adjustment | Vibration | Adjust |
| | Cooling system | Cooling system dirty or plugged | Extended operation in dirty or dusty locations | Clean |
| | Spark arrester screen | Spark arrester screen plugged | Normal wear | Replace |
| Engine does not crank | N/A | | Internal engine problem | See your dealer |

**DANGER**

***Fuel vapors are extremely flammable and can cause fire and/or explosion. Never test for ignition spark by grounding spark plug near cylinder plug hole, otherwise serious personal injury can result.***


© 01/24 ECHO Incorporated

# STORAGE

**WARNING**

***During operation the muffler or catalytic muffler and surrounding cover become hot. Always keep exhaust area clear of flammable debris during transportation or when storing, otherwise serious property damage or personal injury may result.***

## Long Term Storage (Over 30 Days)

Do not store your unit for a prolonged period of time (30 days or longer) without performing protective storage maintenance which includes the following:

1. Store unit in a dry, dust free place, out of the reach of children.

**DANGER**

***Do not store in enclosure where fuel fumes may accumulate or reach an open flame or spark.***

2. Place the stop switch in the “OFF” position.
3. Remove accumulation of grease, oil, dirt and debris from exterior of unit.
4. Perform all periodic lubrication and services that are required.
5. Tighten all the screws and nuts.
6. Drain fuel tank completely. Press purge bulb six to seven times to remove remaining fuel from carburetor then drain the tank again. Close choke, start and run the engine until it stops due to lack of fuel.
7. Allow engine to cool. Remove the spark plug lead from the spark plug. Remove the spark plug. Pour 7 cc (0.25 oz.) of fresh, clean, two-stroke engine oil into the cylinder through the spark plug hole.
8. Pull the recoil starter handle two to three times to distribute the oil inside the engine.
9. Observe the piston location through the spark plug hole. Pull the recoil handle slowly until the piston reaches the top of its travel and leave it there.
10. Install the spark plug. Connect the spark plug lead to the spark plug.


© 01/24 ECHO Incorporated

# SPECIFICATIONS

| MODEL | SRM-3020U |
|---|---|
| Length (without cutter head) | 1,808 mm (71.2 in.) |
| Width | 687 mm (27 in.) |
| Height | 519 mm (20.4 in.) |
| Weight - dry (without cutter head) | 6 kg (13.2 lb.) |
| Engine Type | Air cooled, two-stroke, single cylinder gasoline engine |
| Bore | 36 mm (1.42 in.) |
| Stroke | 30 mm (1.18 in.) |
| Displacement | 30.5 cc (1.86 in.$^3$) |
| Exhaust | Spark arrester muffler or spark arrester muffler with catalyst |
| Carburetor | Diaphragm with purge pump |
| Ignition System | Flywheel magneto, capacitor discharge ignition type |
| Spark Plug | NGKCMR7H – Gap 0.6 mm (0.026 in.) |
| Fuel | Mixed (gasoline and two-stroke oil) |
| Fuel/Oil Ratio | 50:1 |
| Gasoline | Use 89 Octane unleaded. Do not use fuel containing methyl alcohol, more than 10% ethyl alcohol or 15% MTBE. Do not use alternative fuels such as E20 or E85. |
| Oil | ISO-L-EGD (ISO/CD 13738) and J.A.S.O. M345-FD, two-stroke, air-cooled engine oil. |
| Fuel Tank Capacity | 0.71 L (24 US fl. oz.) |
| Starter System | Automatic rewind starter |
| Clutch | Centrifugal type |
| Vibration Reduction Systems | Rubber cushion on engine mount<br><br>Rubber anti-vibration grip on front and rear handle |
| Operating Rod | 25.0 mm (1.0 in.) diameter aluminum tube |
| Drive Shaft | 6.15 mm (0.25 in.) flexible shaft |
| Gear Case Ratio | 1.62:1 |
| Rotating Direction | Counterclockwise (viewed from top) |


© 01/24 ECHO Incorporated

| MODEL | SRM-3020U |
|---|---|
| Cutter Head | Speed Feed® 450 LH nylon line head, line capacity 7.6 m (25 ft.)<br>or<br>Speed Feed® 500 LH nylon line head, line capacity 8.2 m (27 ft.) |
| Handle | Left- Rubber anti-vibration grip<br>Right- Plastic grip |
| Shoulder Harness | Included |
| Idle Speed | 2,900 RPM |
| Clutch Engagement Speed | 3,700 RPM |
| Wide Open Throttle Speed | 10,200 RPM |


© 01/24 ECHO Incorporated

# PRODUCT REGISTRATION

## Thank you for choosing ECHO Power Equipment

Please go to http://www.echo-usa.com/Warranty/Register-Your-ECHO to register your new product on-line. It's ***FAST*** and ***EASY***! NOTE: your information will never be sold or misused by ECHO, Incorporated. Registering your purchase enables us to contact you in the unlikely event of a service update or product recall, and verifies your ownership for warranty consideration.

If you do not have access to the Internet, you can complete the form below and mail to:

***ECHO Incorporated, Product Registration, PO Box 1139,***
***Lake Zurich, IL 60047.***


© 01/24 ECHO Incorporated

# PRODUCT REGISTRATION CARD : TARJETA DE REGISTRO : CARTE D'ENREGISTREMENT DU PRODUIT

**ONLINE OPTION:** Register online and save a stamp! You will be alerted of product updates and/or be sent new ECHO product information and special offers. Simply go to: **www.echo-usa.com**

**OPCIÓN POR INTERNET:** ¡Registrese en la pagina web y ahorre una estampilla! Le alertarán sobre actualizaciones del producto y/o se le enviara información sobre los nuevos productos ECHO y las ofertas especiales. Simplemente visite: **www.echo-usa.com**

**OPTION EN LIGNE :** Enregistrer en ligne et épargner un timbre! Vous serez informé sur les nouveaux produits ECHO et les mises à jour de produit ainsi que les offres spéciales. Simplement visitez le: **www.echo-usa.com**

**Please Print : Por Favor Enscriba Con Letra De Molde : En Lettre Carré S.V.P.**

**Confidential:** Information provided will not be shared or sold

*Purchaser's Name : Nombre del Comprador : Nom de l'acheteur*

*Address : Dirección : Adresse*

*City : Ciudad : Ville* | *State : Estado : Province* | *Zip Code : Código Postal : Code Postal*

*E-Mail Address : Dirección De Correo Electrónico : Courrier Électronique*

*Phone Number : Número De Teléfono : Téléphone* | *Date of Purchase : Fecha de la Compra : Date de l'achat*

*Where Purchased : Nombre del Almacén donde fue Comprado : Lieu d'achat*

*Model Number : Numero del Modelo : No. de modéle* | *Serial Number : Numero de Serie : No. de série*

Registering your purchase enables us to contact you in the unlikely event of a service update or product recall and verifies your ownership in the event of loss. : El registrar su compra nos permite estar en contacto con usted en caso de cualquier evento como el aviso de tiempo de servicio o la revocación del producto y verificación de propiedad en caso de robo o pérdida. : L'enregistrement de votre achat nous permettra de vous contacter dans le cas improbable de modifications des instructions d'entretien ou de rappel du produit et vérifier que vous êtes le propriétaire en cas de vol ou de perte.

Primary use of tool: ☐ Professional ☐ Homeowner ☐ Rental Equip.
Uso primario de la herramienta: ☐ Profesional ☐ Dueño de casa ☐ Alquiler
Usage principal : ☐ Professionnel ☐ Residential ☐ Location

Do you wish to receive periodic ECHO product information and special offers by e-mail? ☐ Yes ☐ No
¿Desea usted recibir información periódica y ofertas especiales por correo electronico sobre el producto ECHO? ☐ Yes ☐ No
Souhaitez-vous recevoir périodiquement de l'information sur les produits ECHO et les offres spéciales par courrier électronique ? ☐ Oui ☐ Non

Did you visit the ECHO website before purchasing your product?
☐ Yes ☐ No
Visitó usted la pagina web ECHO antes de comprar su producto?
☐ Si ☐ No
Avez-vous visité le site d'ECHO avant de procurer votre produit?
☐ Oui ☐ Non

What factor(s) most influenced your purchase?

| | | |
|---|---|---|
| ☐ Performance | ☐ Price | ☐ Dealer |
| ☐ Reliability | ☐ Prior Experience | ☐ Quality |
| ☐ Friend/Family | ☐ Brand | ☐ Warranty |

¿Qué factor(es) influenció más en su compra?

| | | |
|---|---|---|
| ☐ Funcionamiento | ☐ Precio | ☐ Distribuidor |
| ☐ Confiabilidad | ☐ Experiencia Anterior | ☐ Calidad |
| ☐ Amigo/Familia | ☐ Marca | ☐ Garantía |

Quel facteur (facteurs) vous a influencé le plus?

| | | |
|---|---|---|
| ☐ Performance | ☐ Prix | ☐ Marchand |
| ☐ Fiabilité | ☐ Expérience | ☐ Qualité |
| ☐ Ami/Famille | ☐ Marque | ☐ Garantie |

**ECHO Incorporated** 400 Oakwood Rd., Lake Zurich, IL 60047
1.800.432.ECHO WWW.ECHO-USA.COM

X7572270206 02-2012

# NOTES


© 01/24 ECHO Incorporated

© 01/24 ECHO Incorporated

U79812001001 - U79812999999
U79913001001 - U79913999999

**ECHO INCORPORATED**
400 Oakwood Road
Lake Zurich, IL 60047
**www.echo-usa.com**