PB-60HT Power Blower

Sopladore de Portátil
58.2cc

Optional Attachments & Accessories Accessories		Accesorios & Accesorios Opcionales Accessoires
Power Blower Tube Helper Handle	001107	Poignée d'aide pour Tube de Soufflante
Static Protection Kit	900500	Trousse de protection contre les charges électrostatiques
Tube Mount Throttle Kit	99944100001	Trousse de Commande des Gaz sur tube
Rain Gutter Kit	99944100010	Trousse de Gouttière
Tube Loop Handle	99944100020	Anse annulAire pour tube
Vacuum Attachment	PBAV-4600	Attachement d'aspiration

©2014 ECHO Incorporated. All Rights Resevered. Todas las derechas Resevered

TABLE OF CONTENTS - CONTENIDO

Click Any Diagram Description Below To View That Diagram
Chasque cualquier descripción del diagrama abajo para ver ese diagrama

Intake.....3
Admission

Carburetor -- C1M-K49A.....5
Carburateur -- C1M-K49A

Exhaust.....7
Échappement

Starter.....8
Démarreur

Ignition.....9
Allumage

Engine, Short Block -- SB1020.....10
Moteur, Bloc Moteur Embiellé -- SB1020

Blower Tubes.....11
Tubes de Soufflante

Hip Mount Throttle S/N: 001001 - 578085.....12
Manette des Gaz à la Hanche N/S: 001001 - 578085

Hip Mount Throttle S/N: 578059 - 999999.....13
Manette des Gaz à la Hanche N/S: 578059 - 999999

Fan Case, Blower Fan, Engine Cover S/N: 001001 - 568895.....14
Carter de Ventilateur, Ventilateur de Soufflante, Couvercle de Moteur N/S: 001001 - 568895

Fan Case, Blower Fan, Engine Cover S/N: 568896 - 999999.....15
Carter de Ventilateur, Ventilateur de Soufflante, Couvercle de Moteur N/S: 568896 - 999999

Fuel System.....16
Système d'alimentation en Carburant

Backpack Frame, Harness S/N: 001001 - 568895.....17
Harnais, Châssis Dorsal N/S: 001001 - 568895

Backpack Frame, Harness S/N: 568896 - 999999.....18
Harnais, Châssis Dorsal N/S: 568896 - 999999

Labels.....19
Étiquettes

RePower & Gasket Kits.....20
Trousses RePower et Garnitures

Part Number Index.....21
Índice Del Número De Parte

NOTES -- NOTAS

Sopladore de Portátil

Intake
Admission

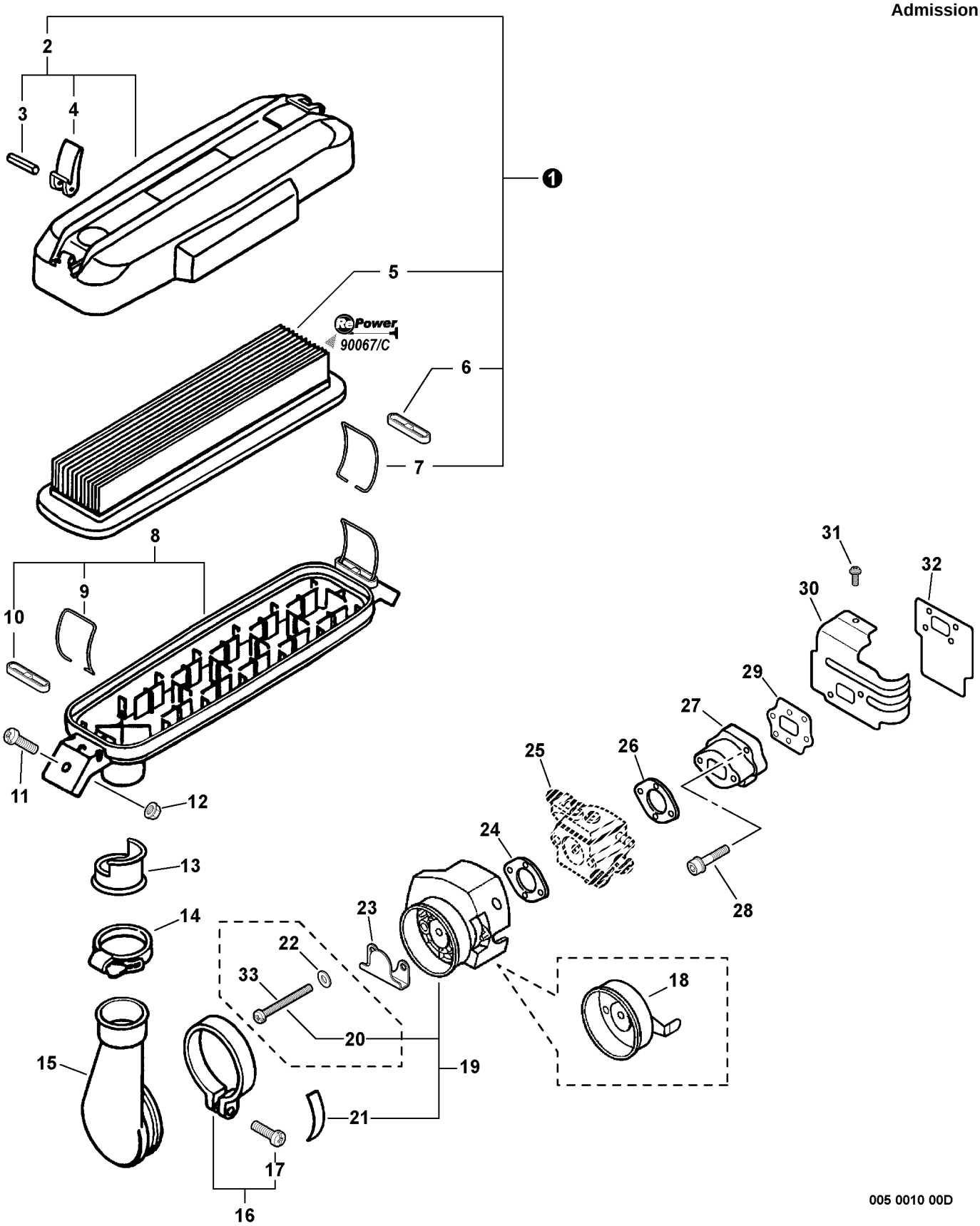

❶	99988800801	1	AIR FILTER KIT	ENSEMBLE FILTRE À AIR
2	+ 13030808360	1	AIR FILTER COVER ASSY	ASSEMBL'E COUVRE-FILTRE À AIR
3	+ 90034530025	2	PIN, SPRING - 3X25	GOUPILLE, RESSORT - 3X25
4	+ 13034108260	2	LATCH	LOQUET
5	+ 13030508361	1	FILTER, AIR(1)	FILTRE, AIR(1)
6	+ V491000220	2	RETAINER	ATTACHE
7	+ 13103208360	2	RING, RETAINING	BAGUE, RETENUE
8	P021014450	1	AIR FILTER CASE ASSY	ASSEMBL'E BOÎTIER FILTRE À AIR
9	+ 13103208360	2	RING, RETAINING	BAGUE, RETENUE
10	+ V491000220	2	RETAINER	ATTACHE
11	9154005014	2	SCREW - 5X14	VIS - 5X14
12	90051600005	2	NUT - FLANGE	ÉCROU - BRIDE
13	17807608360	1	COLLAR - 27	COLLET - 27
14	13071508260	1	CLAMP, HOSE	PINCE, BOYAU
15	13071108260	1	ADAPTER, INTAKE	ADAPTATEUR, ADMISSION
16	21040000660	1	CLAMP KIT	ENSEMBLE PINCE
17	+ 90023805025	1	SCREW - 5X25	VIS - 5X25
18	----------	1	BRACKET, AIR CLEANER - METAL(2)	SUPPORT DE FILTRE A AIR - METAL(2)
19	A221000000	1	AIR CLEANER BRACKET KIT - PLASTIC	AIR CLEANER BRACKET KIT - PLASTIC
20	+ 90024205057	2	SCREW - 5X57(3)	VIS - 5X57(3)
21	+ 89015808261	1	LABEL - CHOKE(4)	ÉTIQUETTE - ÉTRANGLEUR(4)
22	90060300006	2	WASHER - 6(5)	RONDELLE - 6(5)
23	A244000020	1	PLATE, PREVENT	PLAQUE, PRÉVENTION
24	13001603731	1	GASKET, INTAKE(6)	JOINT, ADMISSION(6)
25	----------	1	CARBURETOR(7)	CARBURATEUR(7)
26	13001606434	1	GASKET, INTAKE(6)	JOINT, ADMISSION(6)
27	13000708261	1	INSULATOR, INTAKE	ISOLATEUR, ADMISSION
28	90016205025	2	SCREW - 5X25	VIS - 5X25
29	V103000000	1	GASKET, INTAKE(6)	JOINT, ADMISSION(6)
30	10151408260	1	COVER, CYLINDER - INTAKE	COUVRE-CYLINDRE - PRISE
31	90023805010	1	SCREW - 5X10	VIS - 5X10
32	13001606211	1	SHIELD, INTAKE(6)	BOUCLIER, ADMISSION(6)
33	90022005050	2	SCREW - 5X55(8)	VIS - 5X50(8)
34	90067		RePower TUNE-UP KIT	ENSEMBLE MISE AU POINT
34	90067C		RePower TUNE-UP KIT	ENSEMBLE MISE AU POINT

(FOOTNOTE) ***1*** *- Included In RePower KIT*
2 *- Replaced by ITEM 19*
3 *- For Metal Air Cleaner Bracket, Use ITEMS 33 & 22*
4 *- For Plastic Air Cleaner Bracket ONLY*
5 *- Not Used When Replacing With ITEM 19*
6 *- Included In GASKET KIT*
7 *- See Carburetor Diagram For Details*
8 *- For Metal Air Cleaner Bracket ONLY*

(NOTA DEL PIE) ***1*** *- Inclus dans le KIT de RePower*
2 *- Remplacé par Poste 19*
3 *- Métal Air Cleaner Support, Utilisez la Propriété ITEMS 33 & 22*
4 *- Pour Support Nettoyant Plastique Air Seulement*
5 *- Pas utilisée lors du remplacement par l'article 19*
6 *- Inclus dans le KIT de GARNITURE*
7 *- Voir le diagramme de carburateur pour des détails*
8 *- Métal Air Cleaner Support Uniquement*

Sopladore de Portátil

Carburetor -- C1M-K49A
Carburateur -- C1M-K49A

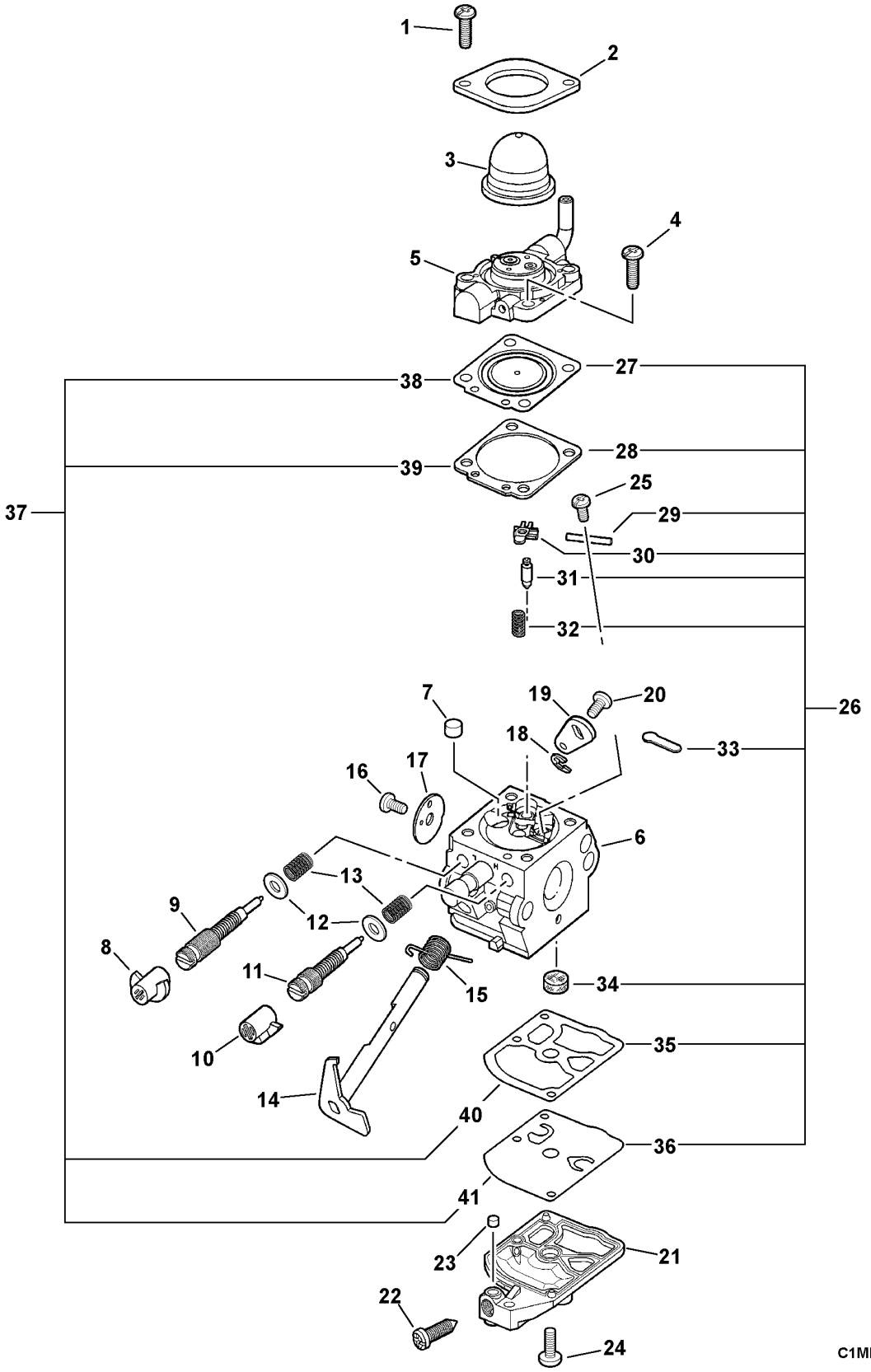

Sopladore de Portátil

Carburetor -- C1M-K49A
Carburateur -- C1M-K49A

	12520008662	1	CARBURETOR -- C1M-K49A	CARBURATEUR -- C1M-K49A
1	+ P005000980	2	SCREW, PURGE BULB RETAINER	VIS, ATTACHE AMPOULE PURGE
2	+ 12536308560	1	RETAINER, PURGE BULB	ATTACHE, POIRE, PURGE
3	+ 12538108660	1	BULB, PURGE	POIRE, PURGE
4	+ 12531005360	2	SCREW, PURGE BASE	VIS, BASE DE PURGE
5	+ 12538308360	1	BASE, PURGE	BASE, PURGE
6	+ ----------	1	BODY, CARBURETOR*(1)*	CORPS, CARBURATEUR*(1)*
7	+ 12537608660	1	NOZZLE, CHECK VALVE	BUSE, CLAPET ANTI-RETOUR
8	+ 12532909860	1	CAP, LIMITER	CAPUCHON, LIMITEUR
9	+ 12531808660	1	NEEDLE - LOW SPEED	POINTEAU - BASSE VITESSE
10	+ 12532939030	1	CAP, LIMITER	CAPUCHON, LIMITEUR
11	+ 12532008660	1	NEEDLE - HIGH SPEED	POINTEAU - HAUTE VITESSE
12	+ 12535320560	2	WASHER	RONDELLE
13	+ 12531942030	2	SPRING, NEEDLE	RESSORT, POINTEAU
14	+ 12531708360	1	SHAFT, THROTTLE	ARBRE, ACCÉLÉRATEUR
15	+ 12531308360	1	SPRING, TRIGGER	RESSORT, GÂCHETTE
16	+ 12531413930	1	SCREW, VALVE	VIS, SOUPAPE
17	+ 12531613930	1	VALVE, THROTTLE	PAPILLON, ACCÉLÉRATEUR
18	+ 12532713930	1	RING, RETAINING	BAGUE, RETENUE
19	+ 12535008360	1	LEVER, THROTTLE	LEVIER, ACCÉLÉRATEUR
20	+ 12534813930	1	SCREW	VIS
21	+ 12532408360	1	COVER, FUEL PUMP	COUVRE-POMPE À ESSENCE
22	+ 12533413930	1	SCREW, IDLE ADJUST	VIS, RÉGLAGE RALENTI
23	+ 12537813930	1	PIECE, FRICTION	PIÈCE, FRICTION
24	+ 12531013930	1	SCREW, PUMP COVER	VIS, COUVRE-POMPE
25	+ 12533913930	1	SCREW, METERING LEVER PIN	VIS, GOUPILLE RETENUE
26	+ 12530008360	1	REPAIR KIT	ENSEMBLE DE RÉPARATION
27	+ ----------	1	DIAPHRAGM, METERING	MEMBRANE, DOSAGE
28	+ ----------	1	GASKET, DIAPHRAGM	JOINT, MEMBRANE
29	+ ----------	1	PIN, METERING LEVER	GOUPILLE, LEVIER DE DOSAGE
30	+ ----------	1	LEVER, METERING	LEVIER, DOSAGE
31	+ ----------	1	VALVE, INLET NEEDLE	SOUPAPE, POINTEAU D'ADMISSION
32	+ ----------	1	SPRING, METERING LEVER	RESSORT, LEVIER DE DOSAGE
33	+ ----------	1	PLUG, WELCH	BOUCHON, WELCH
34	+ ----------	1	STRAINER	TAMIS
35	+ ----------	1	GASKET, PUMP	JOINT, POMPE
36	+ ----------	1	DIAPHRAGM, PUMP	MEMBRANE, POMPE
37	+ 12530308360	1	DIAPHRAGM/GASKET KIT	ENSEMBLE DE MEMBRANE/JOINT
38	+ ----------	1	DIAPHRAGM, METERING	MEMBRANE, DOSAGE
39	+ ----------	1	GASKET, DIAPHRAGM	JOINT, MEMBRANE
40	+ ----------	1	GASKET, PUMP	JOINT, POMPE
41	+ ----------	1	DIAPHRAGM, PUMP	MEMBRANE, POMPE

***(FOOTNOTE) 1** - NOT AVAILABLE SEPARATELY*

***(NOTA DEL PIE) 1** - NON DISPONIBLE SÉPARÉMENT*

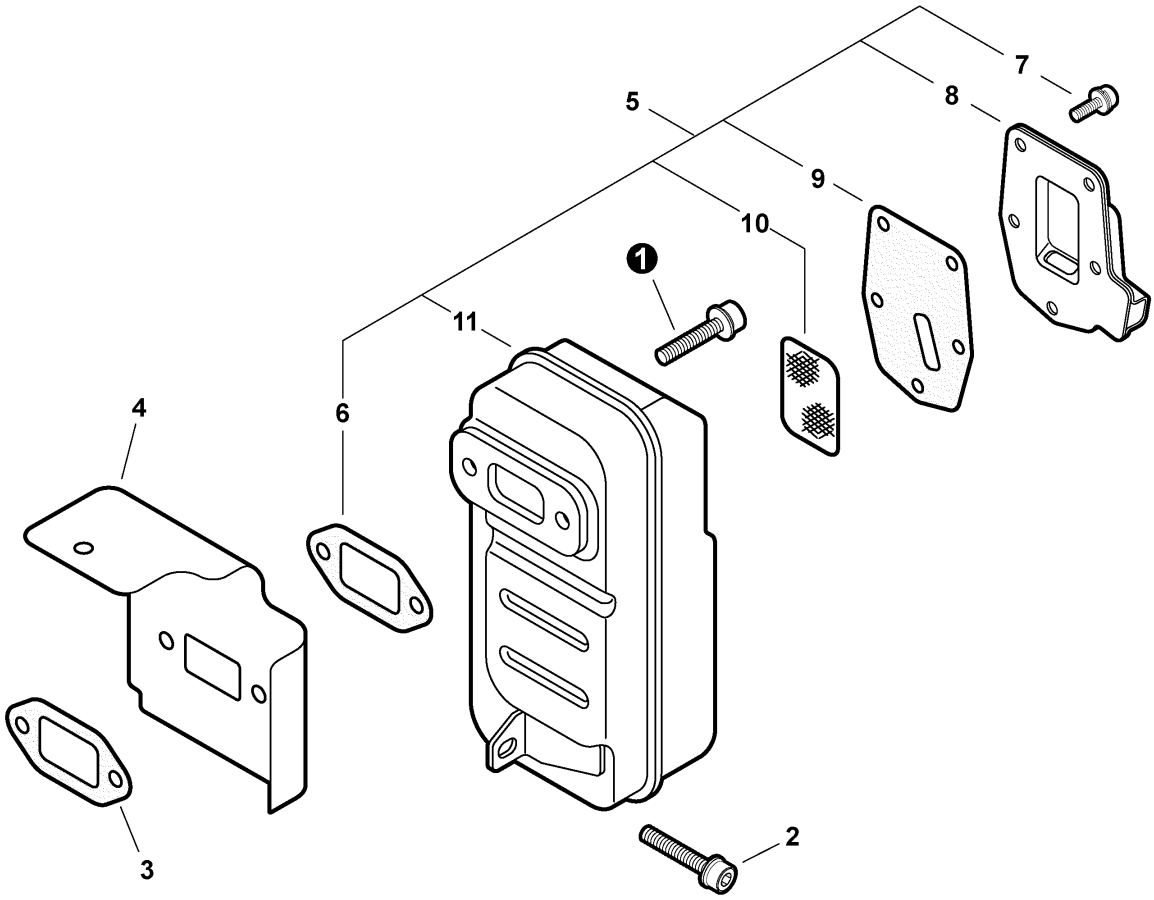

006 0043 000

1	90010506020	2	SCREW - 6X20	VIS - 6X20
2	90016205020	1	SCREW - 5X20	VIS - 5X20
3	14551006210	1	GASKET, EXHAUST(1)	JOINT, ÉCHAPPEMENT(1)
4	10157608260	1	COVER, CYLINDER	COUVRE-CYLINDRE
5	14580008260	1	MUFFLER ASSY	ASSEMBL'E SILENCIEUX
6	+ 14551006210	1	GASKET, EXHAUST(1)	JOINT, ÉCHAPPEMENT(1)
7	+ 90023804010	5	SCREW - 4X10	VIS - 4X10
8	+ 14587408261	1	GUIDE, EXHAUST	GUIDE, ÉCHAPPEMENT
9	+ 14586604261	1	GASKET, EXHAUST(1)	JOINT, ÉCHAPPEMENT(1)
10	+ 14586206720	1	SCREEN, SPARK ARRESTER	ÉCRAN, PARE-ÉTINCELLES
11	+ 14581008260	1	MUFFLER	SILENCIEUX

(FOOTNOTE) 1 *- Included In GASKET KIT*

(NOTA DEL PIE) 1 *- Inclus dans le KIT de GARNITURE*

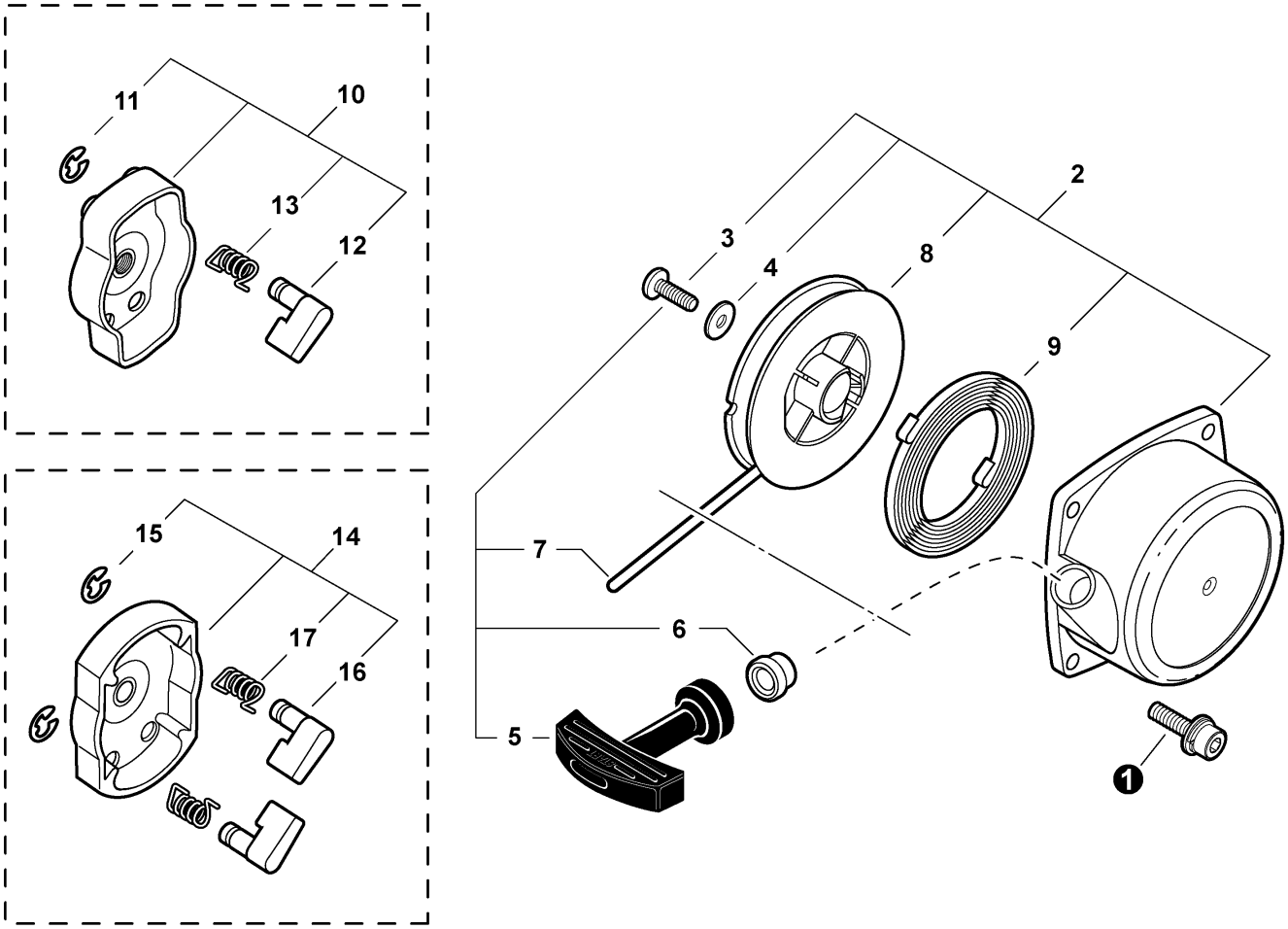

004 0010 000

1	90016304018	4	SCREW - 4X18	VIS - 4X18
2	+ 17720008260	1	STARTER ASSY	ASSEMBL'E DÉMARREUR
3	+ 17723640630	1	SCREW	VIS
4	+ 17721440630	1	WASHER	RONDELLE
5	+ 17722801110	1	GRIP, STARTER	PRISE, DÉMARREUR
6	+ 17722742030	1	GUIDE, ROPE	GUIDE, CORDE
7	+ 17722611120	1	ROPE, STARTER - 4X1110(1)	CORDE, DÉMARREUR - 4X1110(1)
8	+ 17721511120	1	REEL, ROPE	MOULINET, CORDE
9	+ 17722011120	1	SPRING, REWIND	RESSORT, REBOBINAGE
10	17720206210	1	STARTER PAWL ASSY	ASSEMBL'E CLIQUET DÉMARREUR
11	+ 90070000004	1	RING, RETAINING - 4	BAGUE, RETENUE - 4
12	+ 17721840630	1	PAWL, STARTER	CLIQUET, DÉMARREUR
13	+ 17723440630	1	SPRING, RETURN	RESSORT, RAPPEL
14	A052000042	1	STARTER PAWL ASSY(2)	ASSEMBL'E CLIQUET DÉMARREUR(2)
15	+ P022002100	2	RING, RETAINING - 4	BAGUE, RETENUE - 4
16	+ P022003120	2	PAWL, STARTER	CLIQUET, DÉMARREUR
17	+ P022003130	2	SPRING, RETURN	RESSORT, RAPPEL

(FOOTNOTE) ***1*** *- RePower BULK OPTION: 99944440000*
2 *- OPTIONAL*

(NOTA DEL PIE) ***1*** *- OPTION EN BLOC de RePower: 99944440000*
2 *- FACULTATIF*

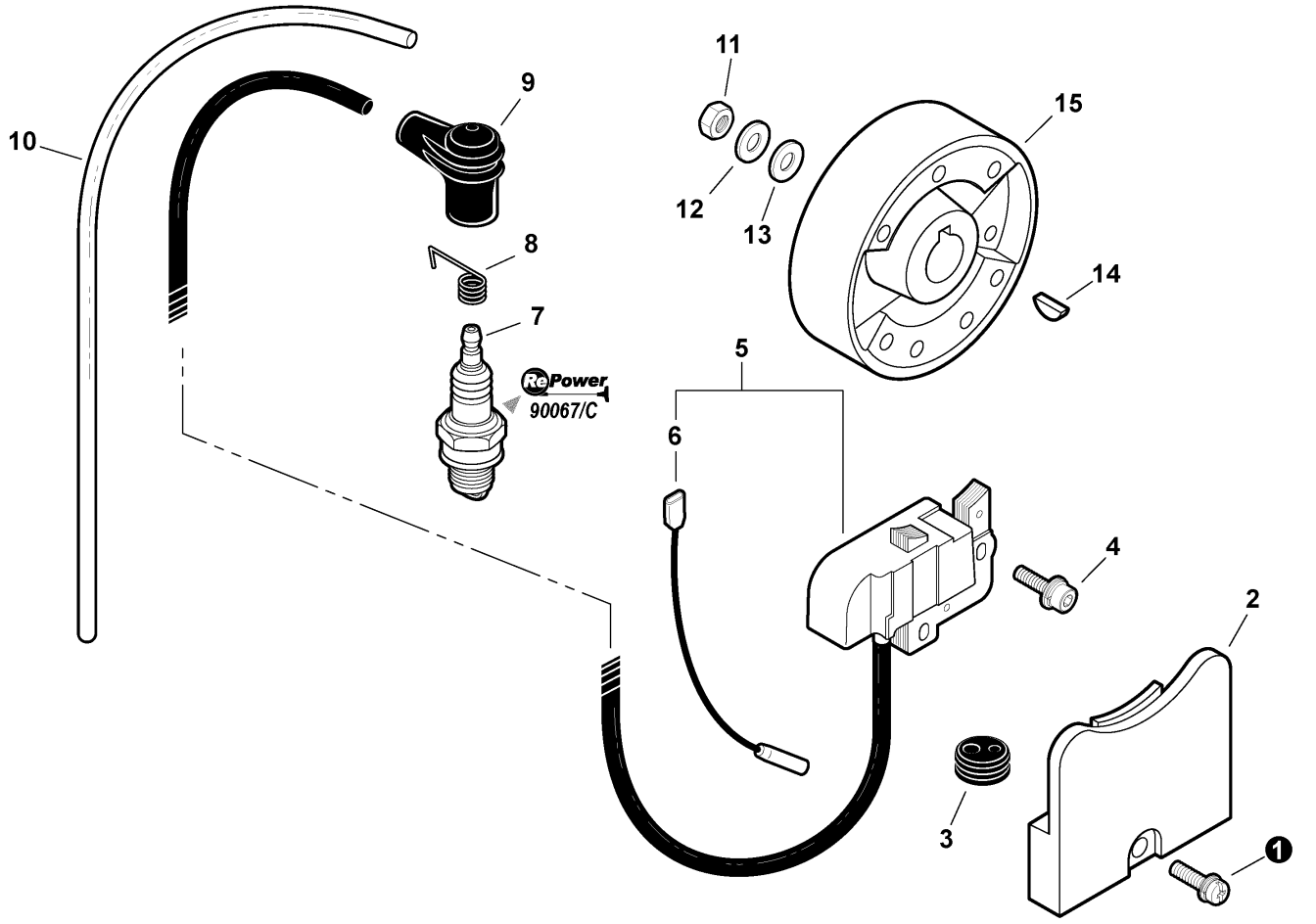

007 0011 00A

1	90023805018	1	SCREW - 5X18	VIS - 5X18
2	15912908261	1	COVER, DUST	ÉTUI À POUSSIÈRE
3	15111204630	1	GROMMET	OEILLET
4	90023805018	2	SCREW - 5X18	VIS - 5X18
5	15660109861	1	COIL, IGNITION	BOBINE, ALLUMAGE
6	+ 16202108260	1	LEAD - IGNITION	FIL - ALLUMAGE
7	99944500071	1	SPARK PLUG -- BPM-7Y(1)	BOUGIE D'ALLUMAGE -- BPM-7Y(1)
7	15901010230	1	SPARK PLUG -- BPMR-7A(2)	BOUGIE D'ALLUMAGE -- BPMR-7A(2)
8	15901103432	1	TERMINAL, SPARK PLUG CAP	BORNE, CAPUCHON BOUGIE ALLUMAGE
9	15901203433	1	CAP, SPARK PLUG	CAPUCHON, BOUGIE
10	15611106160	1	TUBE - VINYL	TUYAU - VINYLE
11	90050100010	1	NUT - 10	ÉCROU - 10
12	90060500010	1	WASHER - 10 -- SPRING	RONDELLE - 10 -- RESSORT
13	90060200010	1	WASHER - 10	RONDELLE - 10
14	90032303014	1	KEY - 3X14	CLÉ - 3X14
15	15680006161	1	FLYWHEEL	VOLANT
16	90067		RePower TUNE-UP KIT	ENSEMBLE MISE AU POINT
16	90067C		RePower TUNE-UP KIT	ENSEMBLE MISE AU POINT

(FOOTNOTE) ***1*** *- Included In RePower KIT*
2 *- CANADA MODELS*

(NOTA DEL PIE) ***1*** *- Inclus dans le KIT de RePower*
2 *- MODÈLES DU CANADA*

Engine, Short Block -- SB1020
Moteur, Bloc Moteur Embiellé -- SB1020

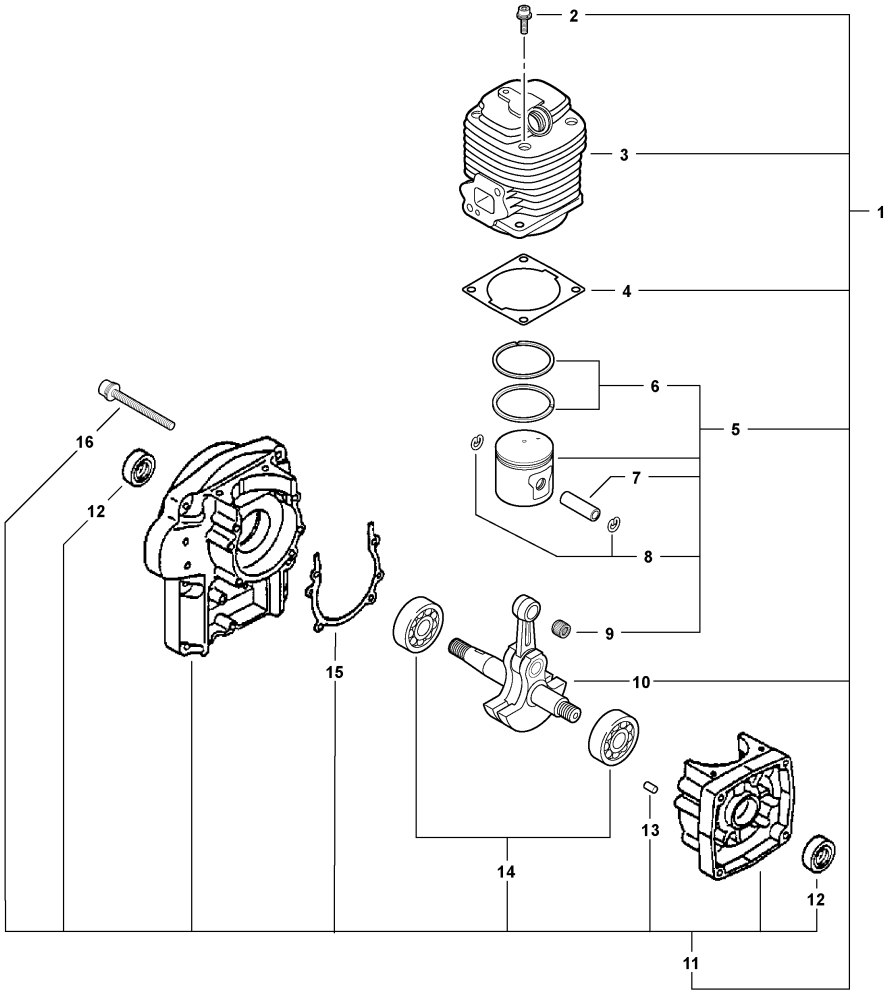

SB1020 0000 000

❶	SB1020	1	SHORT BLOCK -- SB1020(1)	BLOC COURT -- SB1020(1)
2	+ 90016205022	4	SCREW - 5X22	VIS - 5X25
3	+ 10101108360	1	CYLINDER	CYLINDRE
4	+ 10101006211	1	GASKET, CYLINDER(2)	JOINT, CYLINDRE(2)
5	+ 10000008360	1	PISTON KIT	ENSEMBLE DE PISTON
6	+ 10001108360	2	RING, PISTON	SEGMENT, PISTON
7	+ 10001306210	1	PIN, PISTON	AXE, PISTON
8	+ 10001500120	2	RING, RETAINING - 8	BAGUE, RETENUE - 8
9	+ 10001212331	1	BEARING, NEEDLE - 10	ROULEMENT, AIGUILLES - 10
10	+ 10010006210	1	CRANKSHAFT ASSY	ASSEMBL'E VILEBREQUIN
11	+ 10020408261	1	CRANKCASE KIT	ENSEMBLE DE CARTER
12	+ 10021300310	2	SEAL, OIL	JOINT, HUILE
13	+ 10021503930	2	PIN, LOCATING	GOUPILLE, POSITIONNEMENT
14	+ 90081036202	2	BEARING, BALL - 6202	ROULEMENT, BILLES - 6202DDU
15	+ 10024210721	1	GASKET, CRANKCASE(2)	JOINT, CARTER(2)
16	+ 90016205040	4	SCREW - 5X40	VIS - 5X40

(FOOTNOTE) ***1*** *- RePower OPTION*
2 *- Included In GASKET KIT*

(NOTA DEL PIE) ***1*** *- OPTION de RePower*
2 *- Inclus dans le KIT de GARNITURE*

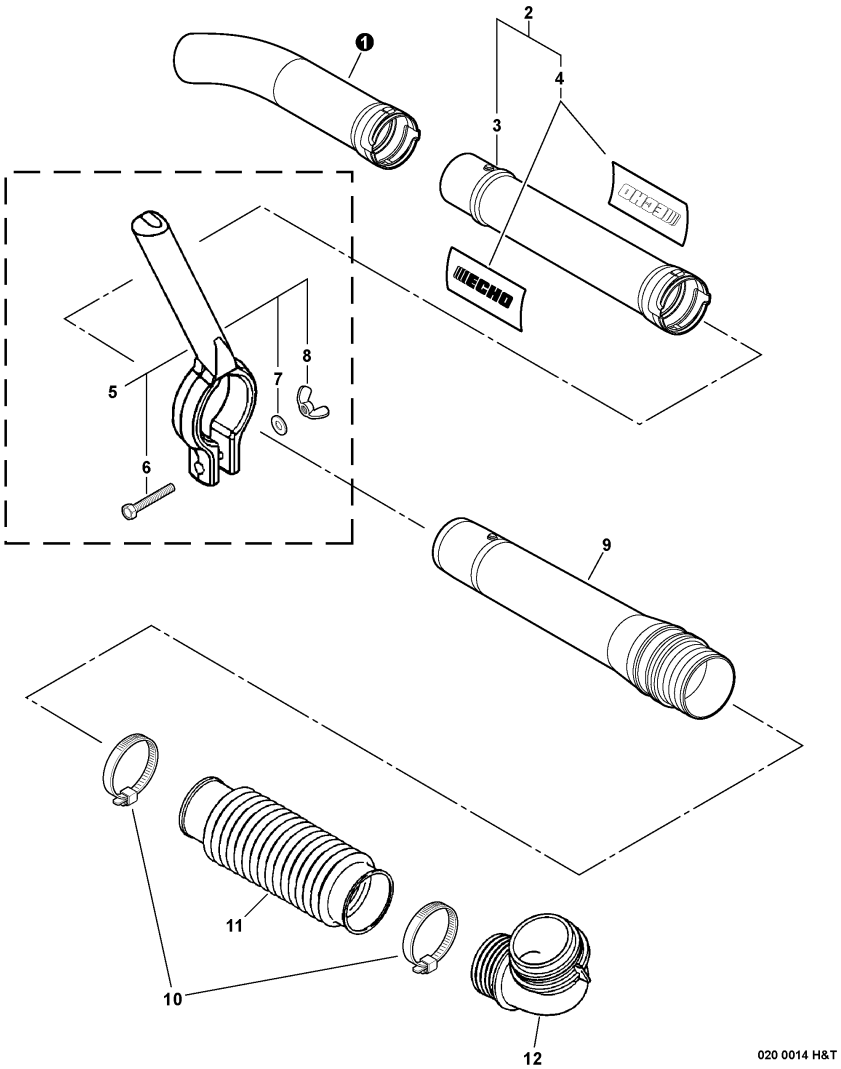

1	21002303461	1	TUBE, BLOWER - CURVED	TUYAU, SOUFFLEUR - COURBÉ
2	21000103462	1	BLOWER TUBE KIT - STRAIGHT	ENSEMBLE TUYAU, SOUFFLEUR - CYLINDRIQUE
3	+ 21001503460	1	TUBE, BLOWER - STRAIGHT	TUYAU, SOUFFLEUR - CYLINDRIQUE
4	+ 89011804262	2	LABEL - ECHO	ÉTIQUETTE - ECHO
5	001107	1	HANDLE ASSY(1)	ASSEMBL'E POIGNÉE(1)
6	+ 90010006045	1	BOLT - 6X45	BOULON - 6X45
7	+ 90060000006	1	WASHER - 6	RONDELLE - 6
8	+ 90052500006	1	WINGNUT - 6	ÉCROU À OREILLES - 6
9	21200507560	1	TUBE, BLOWER - SWIVEL	TUYAU, SOUFFLEUR - PIVOT
10	V495000430	1	CLAMP, HOSE	PINCE, BOYAU
11	21001308360	1	TUBE, BLOWER - FLEXIBLE	TUYAU, SOUFFLEUR - FLEXIBLE
12	E160000061	1	TUBE, BLOWER - ELBOW	TUYAU, SOUFFLEUR - COUDE

(FOOTNOTE) 1 *- For Hip Mount Throttle Models*

(NOTA DEL PIE) 1 *- Pour Hip Mont Modèles d'Accélérateur*

Sopladore de Portátil

Hip Mount Throttle
Manette des Gaz à la Hanche
S/N: 001001 - 578085

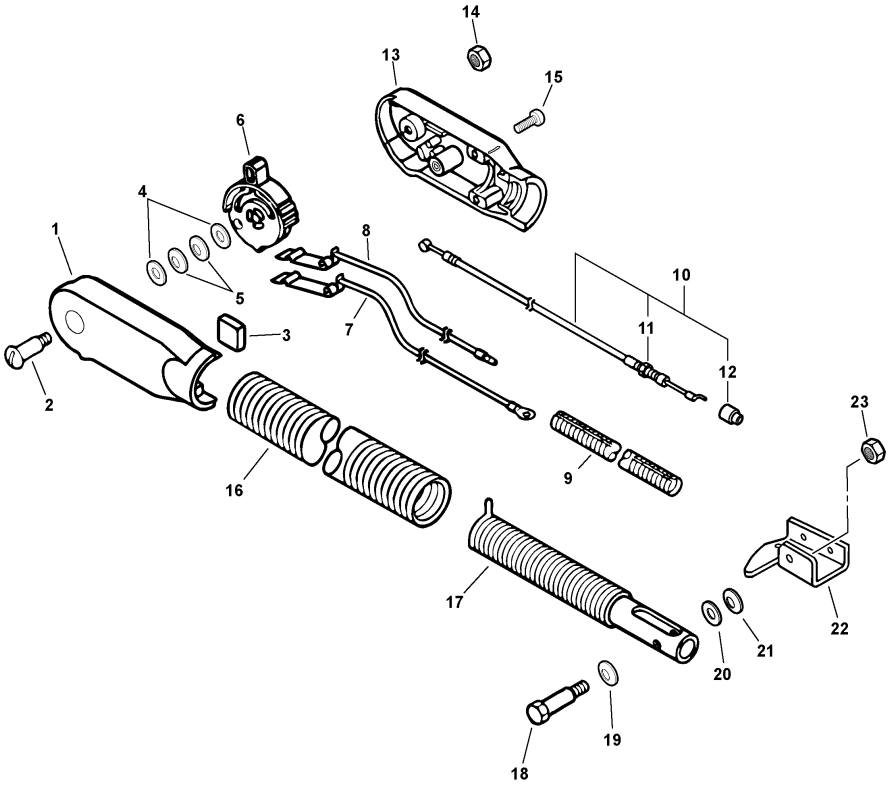

023 0007 H0B

❶	C471000030	1	HOUSING, THROTTLE - LEFT	ENCASTREMENT, ACCÉLÉRATEUR - GAUCHE
2	60403021060	1	SCREW - 4	VIS - 4
3	10429321060	1	PAD, FOAM	COUSSINET, MOUSSE
4	69911804560	2	WASHER - 6	RONDELLE - 6
5	17816021060	2	WASHER - SPRING	RONDELLE - RESSORT
6	C453000020	1	LEVER, THROTTLE	LEVIER, ACCÉLÉRATEUR
7	16200721601	1	LEAD - GROUND	FIL - TERRE
8	16200721161	1	LEAD, SPRING SWITCH	FIL, INTERRUPTEUR À RESSORT
9	16202321061	1	TUBE, PROTECTIVE - CORRUGATED	TUYAU, PROTECTION - ONDULÉE
10	17800121060	1	THROTTLE CABLE ASSY	ASSEMBL'E CÂBLE, ACCÉLÉRATEUR
11	+ 90050000006	1	LOCKNUT - 6	CONTRE-ÉCROU - 6
12	+ 17808208260	1	CAP, DUST	CAPUCHON, POUSSIÈRE
13	C471000040	1	HOUSING, THROTTLE - RIGHT	ENCASTREMENT, ACCÉLÉRATEUR - DROIT
14	90056000004	1	LOCKNUT - 4	CONTRE-ÉCROU - 4
15	88995021060	3	SCREW - 5X20	VIS - 5X20
16	17801621160	1	TUBE, OUTER	TUYAU, EXTERNE
17	17801621060	1	SPRING TUBE ASSY	ASSEMBL'E TUYAU RESSORT
18	43261721060	1	BOLT - 6	BOULON - 6
19	17812921060	1	WASHER - SPRING	RONDELLE - RESSORT
20	69402921060	1	WASHER - 8	RONDELLE - 8
21	70101721061	1	WASHER - SPRING	RONDELLE - RESSORT
22	17816521060	1	BRACKET	SUPPORT
23	90003010008	1	LOCKNUT	CONTRE-ÉCROU

Sopladore de Portátil

Hip Mount Throttle
Manette des Gaz à la Hanche
S/N: 578059 - 999999

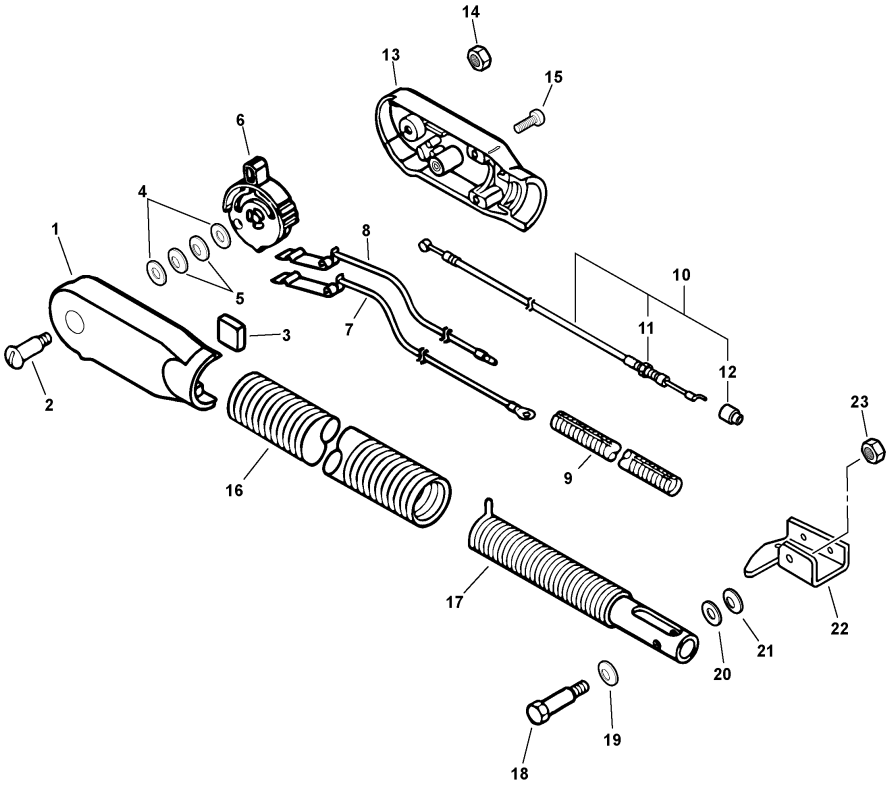

023 0007 H00

❶	C471000030	1	HOUSING, THROTTLE - LEFT	ENCASTREMENT, ACCÉLÉRATEUR - GAUCHE
2	60403021060	1	SCREW - 4	VIS - 4
3	10429321060	1	PAD, FOAM	COUSSINET, MOUSSE
4	69911804560	2	WASHER - 6	RONDELLE - 6
5	17816021060	2	WASHER - SPRING	RONDELLE - RESSORT
6	C453000020	1	LEVER, THROTTLE	LEVIER, ACCÉLÉRATEUR
7	V485000070	1	LEAD, SWITCH	FIL - INTERRUPTEUR
8	V485000060	1	LEAD - IGNITION	FIL - ALLUMAGE
9	16202321061	1	TUBE, PROTECTIVE - CORRUGATED	TUYAU, PROTECTION - ONDULÉE
10	17800121060	1	THROTTLE CABLE ASSY	ASSEMBL'E CÂBLE, ACCÉLÉRATEUR
11	+ 90050000006	1	LOCKNUT - 6	CONTRE-ÉCROU - 6
12	+ 17808208260	1	CAP, DUST	CAPUCHON, POUSSIÈRE
13	C471000040	1	HOUSING, THROTTLE - RIGHT	ENCASTREMENT, ACCÉLÉRATEUR - DROIT
14	90056000004	1	LOCKNUT - 4	CONTRE-ÉCROU - 4
15	88995021060	3	SCREW - 5X20	VIS - 5X20
16	17801621160	1	TUBE, OUTER	TUYAU, EXTERNE
17	17801621060	1	SPRING TUBE ASSY	ASSEMBL'E TUYAU RESSORT
18	43261721060	1	BOLT - 6	BOULON - 6
19	17812921060	1	WASHER - SPRING	RONDELLE - RESSORT
20	69402921060	1	WASHER - 8	RONDELLE - 8
21	70101721061	1	WASHER - SPRING	RONDELLE - RESSORT
22	17816521060	1	BRACKET	SUPPORT
23	90003010008	1	LOCKNUT	CONTRE-ÉCROU

Sopladore de Portátil

Fan Case, Blower Fan, Engine Cover
Carter de Ventilateur, Ventilateur de Soufflante, Couvercle de Moteur
S/N: 001001 - 568895

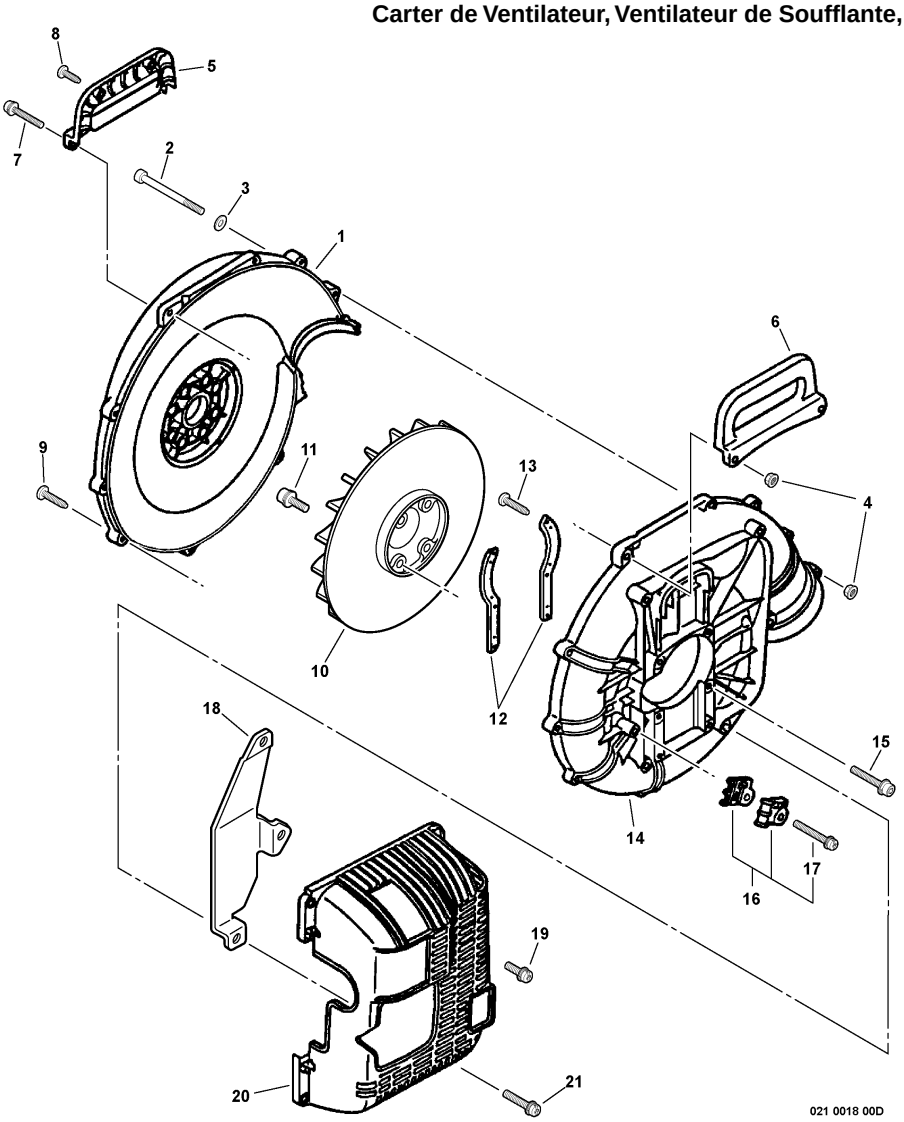

❶	P021000380	1	COVER, FAN - INNER	COUVRE-VENTILATEUR - INTÉRIEUR
2	90010505060	2	SCREW - 5X60	VIS - 5X60
3	90060200005	2	WASHER - 5	RONDELLE - 5
4	90051600005	6	NUT - FLANGE	ÉCROU - BRIDE
5	35111008260	1	HANDLE - INNER -- GRAY	POIGNÉE - INTERNE -- GRIS
6	35101008260	1	HANDLE - OUTER -- GRAY	POIGNÉE - EXTÉRIEUR -- GRIS
7	90023805045	2	SCREW - 5X45	VIS - 5X45
8	90025305016	5	SCREW - 5X16 -- TAPPING	VIS - 5X16 -- AUTOTARAUDEUSE
9	90025305030	7	SCREW - 5X30	VIS - 5X30
10	20000508261	1	FAN	VENTILATEUR
11	90016205020	4	SCREW - 5X20	VIS - 5X20
12	10491308360	2	BRACKET, ENGINE	SUPPORT, MOTEUR
13	90024603012	4	SCREW - 3X12 -- TAPPING	VIS - 3X12 -- AUTOTARAUDEUSE
14	20010508260	1	COVER, FAN - OUTER	COUVRE-VENTILATEUR - EXTÉRIEUR
15	90016205032	6	SCREW - 5X32	VIS - 5X32
16	17810108260	1	CABLE HOLDER KIT	ENSEMBLE DE SUPPORT, CÂBLE
17	+ 90023805025	1	SCREW - 5X25	VIS - 5X25
18	10027008260	1	INSULATOR	ISOLATEUR
19	90023805010	1	SCREW - 5X10	VIS - 5X10
20	10401208260	1	COVER, ENGINE	COUVRE-MOTEUR
21	90016205018	4	SCREW - 5X18	VIS - 5X18

Sopladore de Portátil

Fan Case, Blower Fan, Engine Cover
Carter de Ventilateur, Ventilateur de Soufflante, Couvercle de Moteur
S/N: 568896 - 999999

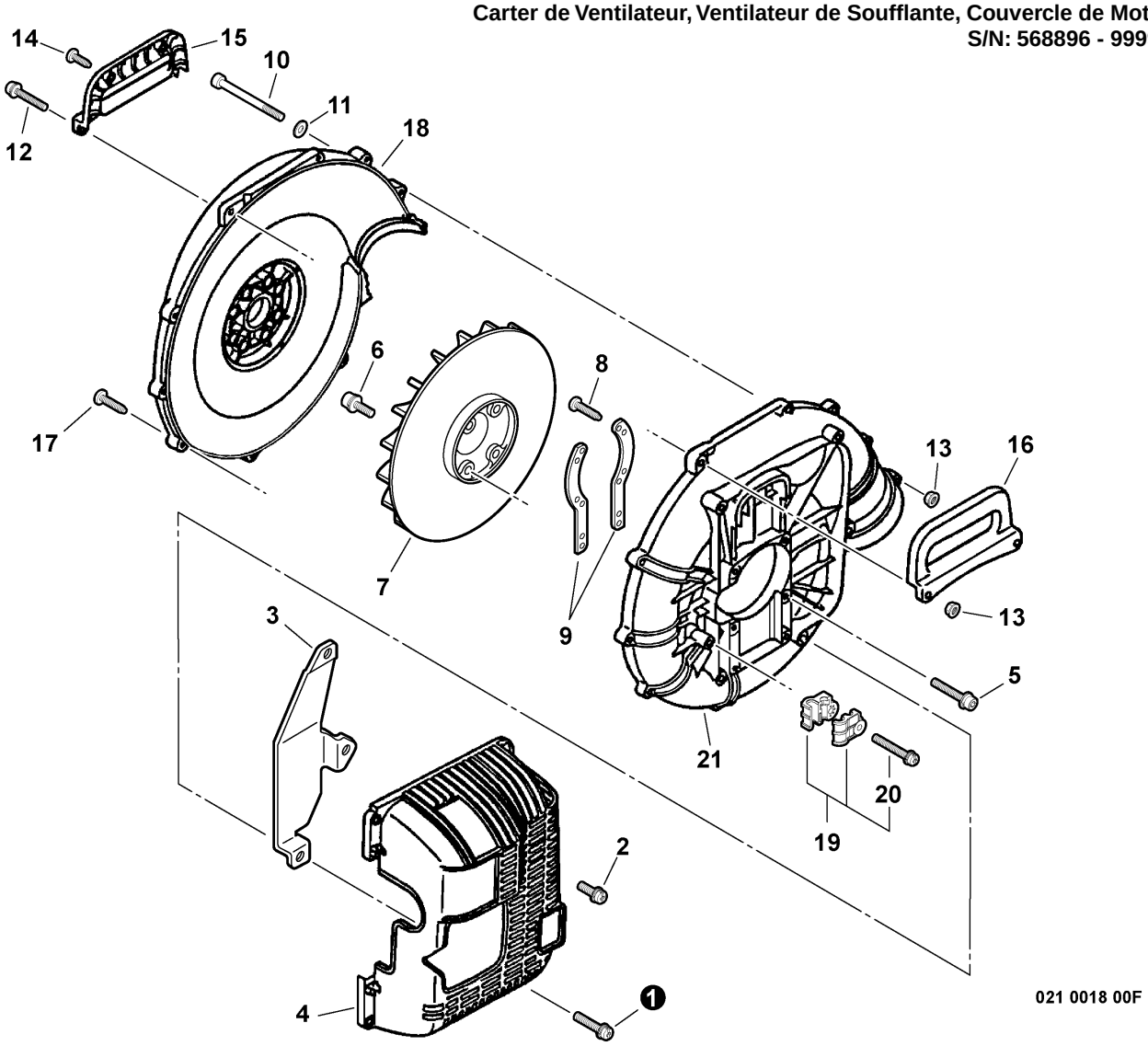

1	90023805018	4	SCREW - 5X18	VIS - 5X18
2	90023805010	1	SCREW - 5X10	VIS - 5X10
3	10027008260	1	INSULATOR	ISOLATEUR
4	A190000102	1	COVER, ENGINE	COUVRE-MOTEUR
5	90016205032	6	SCREW - 5X32	VIS - 5X32
6	90016205020	4	SCREW - 5X20	VIS - 5X20
7	20000508261	1	FAN	VENTILATEUR
8	90024603012	4	SCREW - 3X12 -- TAPPING	VIS - 3X12 -- AUTOTARAUDEUSE
9	10491308360	2	BRACKET, ENGINE	SUPPORT, MOTEUR
10	90010505060	2	SCREW - 5X60	VIS - 5X60
11	90060200005	2	WASHER - 5	RONDELLE - 5
12	90023805045	2	SCREW - 5X45	VIS - 5X45
13	90051600005	4	NUT - FLANGE	ÉCROU - BRIDE
14	90025305016	2	SCREW - 5X16 -- TAPPING	VIS - 5X16 -- AUTOTARAUDEUSE
15	35111008260	1	HANDLE - INNER -- GRAY	POIGNÉE - INTERNE -- GRIS
16	35101008260	1	HANDLE - OUTER -- GRAY	POIGNÉE - EXTÉRIEUR -- GRIS
17	90025305030	7	SCREW - 5X30	VIS - 5X30
18	20011108265	1	COVER, FAN - INNER -- GRAY	COUVRE-VENTILATEUR - INTÉRIEUR -- GRIS
19	17810108260	1	CABLE HOLDER KIT	ENSEMBLE DE SUPPORT, CÂBLE
20	+ 90023805025	1	SCREW - 5X25	VIS - 5X25
21	20010508260	1	COVER, FAN - OUTER	COUVRE-VENTILATEUR - EXTÉRIEUR

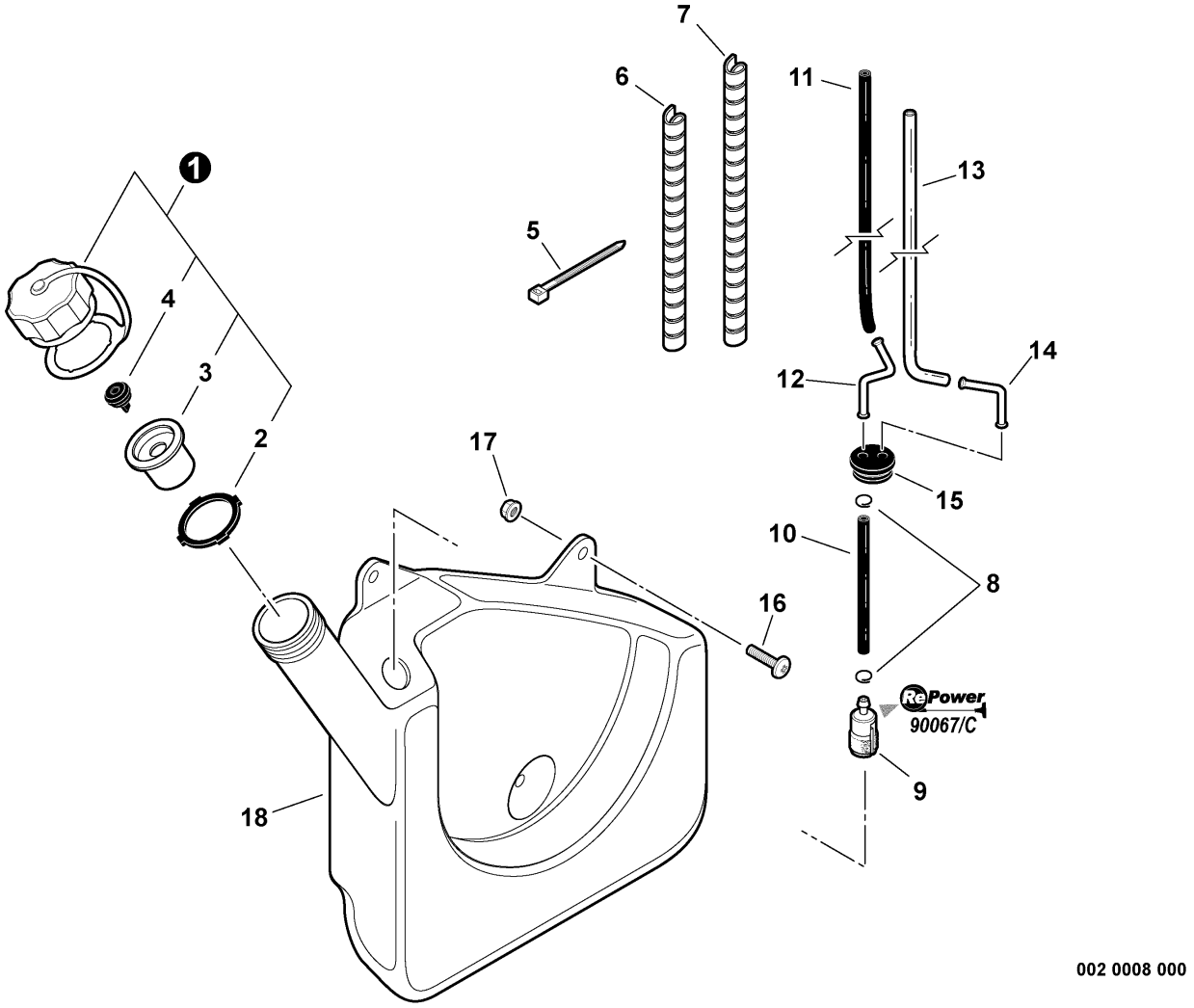

1	13160009861	1	CAP ASSY	ASSEMBL'E CAPUCHON
2	+ 13101621060	1	GASKET, CAP	JOINT, CAPUCHON
3	+ A358000000	1	VENT HOLDER ASSY	SUPPORT DE CLAPET ANTIRETOUR
4	+ 13131406320	1	VENT, FUEL CAP	ÉVENT, CAPUCHON À ESSENCE
5	17812143230	2	TIE, CABLE - SMALL	ATTACHE SANGLE - PETIT
6	17812703460	1	WRAP, SPIRAL - 130mm	ENCASTREMENT EN SPIRALE - 130mm
7	13201508260	1	WRAP, SPIRAL	ENCASTREMENT EN SPIRALE
8	V490001230	2	CLIP - 6.5	ANNEAU - 6.5
10	13201008260	1	PIPE - 3X7X520 -- BLACK(1)	TUYAU - 3X7X520 -- NOIR(1)
9	13120519831	1	FILTER, FUEL(2)	FILTRE, ESSENCE(2)
11	V471000770	1	PIPE - 3X6X280 -- BLACK(3)	TUYAU - 3X6X280 -- NOIR(3)
12	13201108260	1	CONNECTOR, FUEL PIPE	CONNECTEUR, TUYAU À ESSENCE
13	13201608260	1	PIPE - 2X4X480 -- CLEAR(4)	TUYAU - 2X4X480 -- CLAIR(4)
14	13202108260	1	CONNECTOR, PIPE	CONNECTEUR, TUYAU
15	13211502960	1	GROMMET	OEILLET
16	90020905020	3	SCREW - 5X20	VIS - 5X20
17	90051600005	3	NUT - FLANGE	ÉCROU - BRIDE
18	A350000711	1	TANK, FUEL	RÉSERVOIR, ESSENCE
19	90067		RePower TUNE-UP KIT	ENSEMBLE MISE AU POINT
19	90067C		RePower TUNE-UP KIT	ENSEMBLE MISE AU POINT

(FOOTNOTE) ***1*** *- RePower BULK OPTION: 90016*
2 *- Included In RePower KIT*
3 *- RePower BULK OPTION: 90015*
4 *- RePower BULK OPTION: 90018*

(NOTA DEL PIE) ***1*** *- OPTION EN BLOC de RePower: 90016*
2 *- Inclus dans le KIT de RePower*
3 *- OPTION EN BLOC de RePower: 90015*
4 *- OPTION EN BLOC de RePower: 90018*

Sopladore de Portátil

Backpack Frame, Harness
Harnais, Châssis Dorsal
S/N: 001001 - 568895

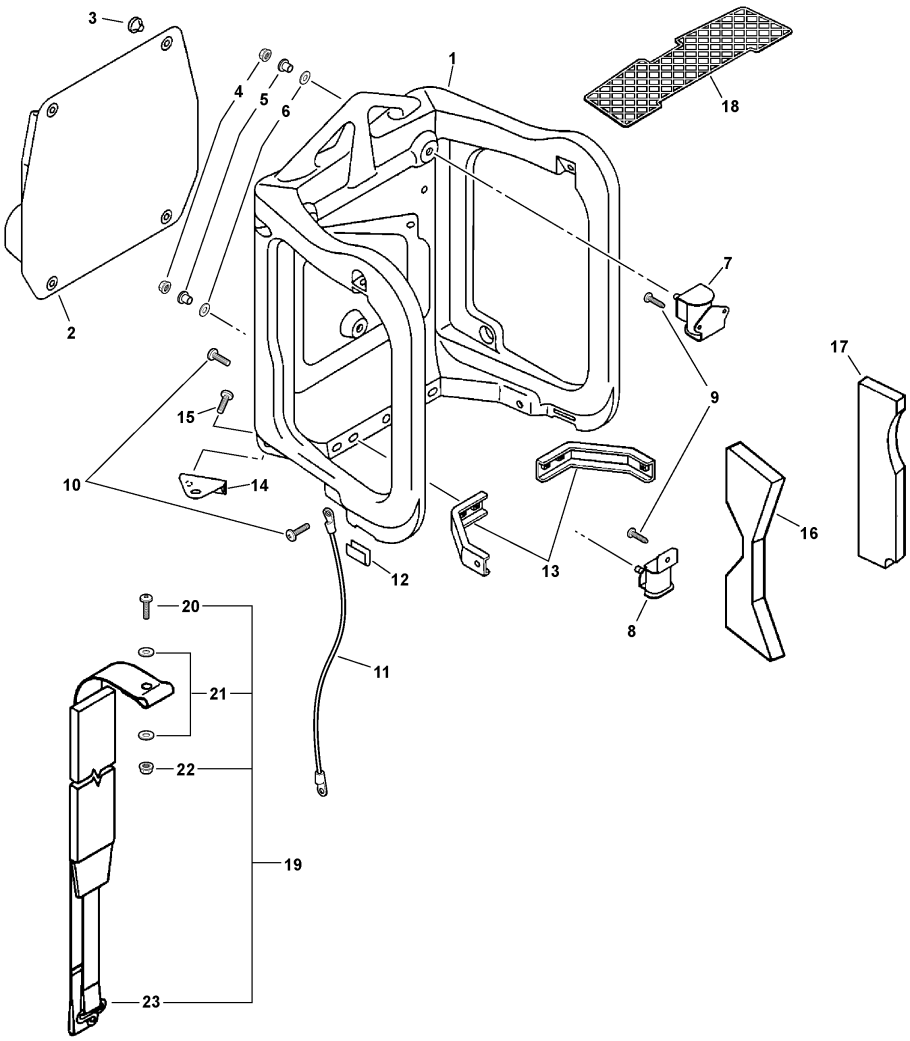

❶	30001008360	1	FRAME, BACKPACK	CHÂSSIS, DOS
2	30010508260	1	CUSHION, BACKPACK	COUSSIN, DOS
3	30033306160	4	CLIP	ANNEAU
4	90051600005	3	NUT - FLANGE	ÉCROU - BRIDE
5	10491508260	3	SPACER	ENTRETOISE
6	13192502310	3	WASHER - RUBBER	RONDELLE - CAOUTCHOUC
7	10090508261	2	CUSHION	COUSSIN
8	P021000251	1	CUSHION	COUSSIN
9	90025305016	6	SCREW - 5X16 -- TAPPING	VIS - 5X16 -- AUTOTARAUDEUSE
10	9154005014	6	SCREW - 5X14	VIS - 5X14
11	16200721260	1	LEAD - GROUND	FIL - TERRE
12	30003208360	2	BUMPER	PARE-CHOC
13	30001208260	2	CONNECTOR, FRAME	CONNECTEUR, CHÂSSIS
14	30061408260	1	BRACKET, HANGER	SUPPORT, CROCHET
15	90020905020	4	SCREW - 5X20	VIS - 5X20
16	70116021260	1	PAD, FOAM - LEFT	COUSSINET, MOUSSE - GAUCHE
17	70116121260	1	PAD, FOAM - RIGHT	COUSSINET, MOUSSE - DROIT
18	30291421060	1	GAURD, LEAF	PARE-FEUILLES
19	P021001760	2	BACKPACK STRAP ASSY	ASSEMBL'E SANGLE DE DOS
20	+ 9154005014	2	SCREW - 5X14	VIS - 5X14
21	+ 30021700610	4	WASHER	RONDELLE
22	+ 90051600005	2	NUT - FLANGE	ÉCROU - BRIDE
23	+ 30101608260	2	RING	ANNEAU

Sopladore de Portátil

Backpack Frame, Harness
Harnais, Châssis Dorsal
S/N: 568896 - 999999

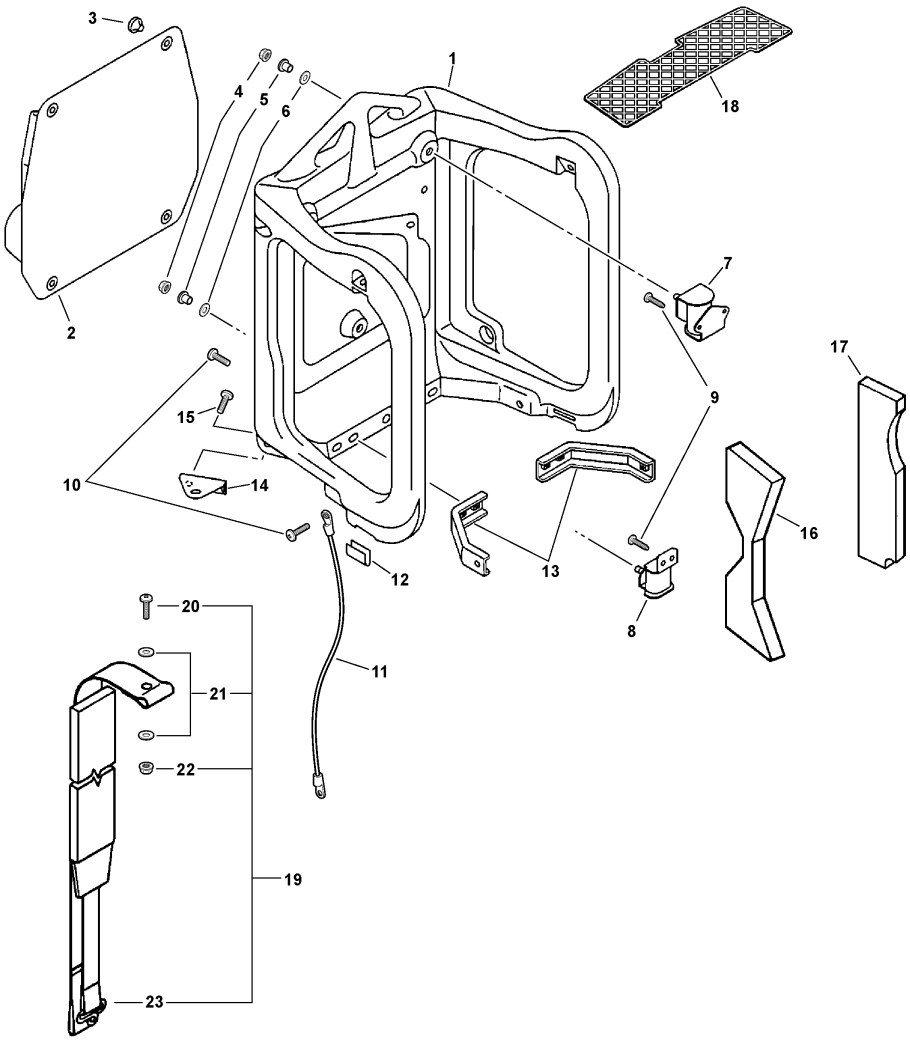

❶	30001008360	1	FRAME, BACKPACK	CHÂSSIS, DOS
2	30010508260	1	CUSHION, BACKPACK	COUSSIN, DOS
3	30033306160	4	CLIP	ANNEAU
4	90051600005	3	NUT - FLANGE	ÉCROU - BRIDE
5	10491508260	3	SPACER	ENTRETOISE
6	13192502310	3	WASHER - RUBBER	RONDELLE - CAOUTCHOUC
7	10090508261	2	CUSHION	COUSSIN
8	V401000001	1	CUSHION	COUSSIN
9	90025305016	6	SCREW - 5X16 -- TAPPING	VIS - 5X16 -- AUTOTARAUDEUSE
10	9154005014	6	SCREW - 5X14	VIS - 5X14
11	16200721260	1	LEAD - GROUND	FIL - TERRE
12	30003208360	2	BUMPER	PARE-CHOC
13	30001208260	2	CONNECTOR, FRAME	CONNECTEUR, CHÂSSIS
14	30061408260	1	BRACKET, HANGER	SUPPORT, CROCHET
15	90020905020	4	SCREW - 5X20	VIS - 5X20
16	70116021260	1	PAD, FOAM - LEFT	COUSSINET, MOUSSE - GAUCHE
17	70116121260	1	PAD, FOAM - RIGHT	COUSSINET, MOUSSE - DROIT
18	30291421060	1	GAURD, LEAF	PARE-FEUILLES
19	P021001760	2	BACKPACK STRAP ASSY	ASSEMBL'E SANGLE DE DOS
20	+ 9154005014	2	SCREW - 5X14	VIS - 5X14
21	+ 30021700610	4	WASHER	RONDELLE
22	+ 90051600005	2	NUT - FLANGE	ÉCROU - BRIDE
23	+ 30101608260	2	RING	ANNEAU

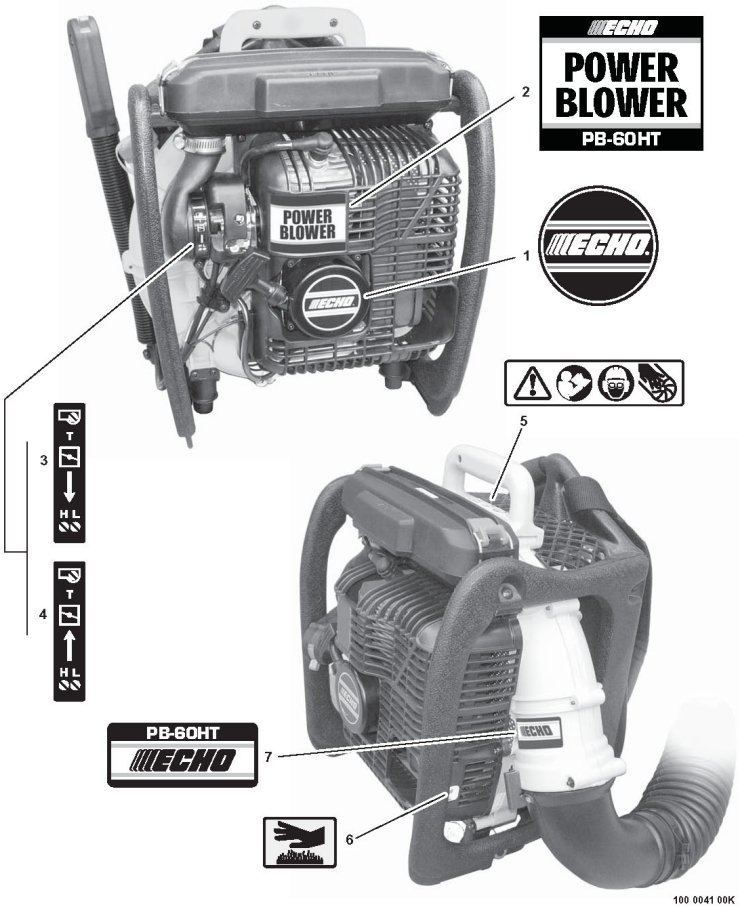

❶	89011849330	1	LABEL - ECHO	ÉTIQUETTE - ECHO
2	89011521160	1	LABEL - MODEL -- PB-60HT	ÉTIQUETTE - MODÈLE -- PB-60HT
3	89015808260	1	LABEL - CHOKE(1)	ÉTIQUETTE - ÉTRANGLEUR(1)
4	89015808261	1	LABEL - CHOKE(2)	ÉTIQUETTE - ÉTRANGLEUR(2)
5	89016009461	1	LABEL - CAUTION	ÉTIQUETTE - AVERTISSEMENT
6	X505002310	1	LABEL - HOT SURFACE	ÉTIQUETTE - SURFACE CHAUDE
7	89011221160	1	LABEL - MODEL -- PB-60HT	ÉTIQUETTE - MODÈLE -- PB-60HT

(FOOTNOTE) ***1*** *- Use With Metal Air Cleaner Bracket*
2 *- Use With Plastic Air Cleaner Bracket*

(NOTA DEL PIE) ***1*** *- Utilisation Avec Support Métallique du Filtre à Air*
2 *- Utilisation Avec Support Plastique du Filtre à Air*

NO DIAGRAM REQUIRED
ESQUEMA NO SE REQUIERE
GRAPHIQUE NON REQUIS
NO ESQUEMA NECESSÁRIO

❶	90067	1	RePower TUNE-UP KIT	ENSEMBLE MISE AU POINT
2	+ ----------	1	FILTER, AIR	FILTRE, AIR
3	+ ----------	1	FILTER, FUEL	FILTRE, ESSENCE
4	+ ----------	1	SPARK PLUG -- BPM-7Y	BOUGIE D'ALLUMAGE -- BPM-7Y
5	90067C	1	RePower TUNE-UP KIT*(1)*	ENSEMBLE MISE AU POINT*(1)*
6	+ ----------	1	FILTER, AIR	FILTRE, AIR
7	+ ----------	1	FILTER, FUEL	FILTRE, ESSENCE
8	+ ----------	1	SPARK PLUG -- BPMR-7A	BOUGIE D'ALLUMAGE -- BPMR-7A
9	88900008262	1	GASKET KIT	ENSEMBLE DE JOINTS
10	+ ----------	1	GASKET, CRANKCASE	JOINT, CARTER
11	+ ----------	1	GASKET, CYLINDER	JOINT, CYLINDRE
12	+ ----------	1	GASKET, INTAKE	JOINT, ADMISSION
13	+ ----------	1	GASKET, INTAKE	JOINT, ADMISSION
14	+ ----------	1	GASKET, INTAKE	JOINT, ADMISSION
15	+ ----------	1	SHIELD, INTAKE	BOUCLIER, ADMISSION
16	+ ----------	1	GASKET, EXHAUST	JOINT, ÉCHAPPEMENT
17	+ ----------	1	SHIELD, EXHAUST	BOUCLIER, ÉCHAPPEMENT

(FOOTNOTE) 1 *- CANADA MODELS*

(NOTA DEL PIE) 1 *- MODÈLES DU CANADA*

PART NUMBER INDEX - ÍNDICE DEL NÚMERO DE PARTE

Click The Page Number After Any Part Number To View The Diagram Containing That Part
Chasque la página después de cualquier número de parte para ver el diagrama que contiene esa parte

Part Number	Page
----------	4, 6, 20
001107	11
10000008360	10
10001108360	10
10001212331	10
10001306210	10
10001500120	10
10010006210	10
10020408261	10
10021300310	10
10021503930	10
10024210721	10
10027008260	14, 15
10090508261	17, 18
10101006211	10
10101108360	10
10151408260	4
10157608260	7
10401208260	14
10429321060	12, 13
10491308360	14, 15
10491508260	17, 18
12520008662	6
12530008360	6
12530308360	6
12531005360	6
12531013930	6
12531308360	6
12531413930	6
12531613930	6
12531708360	6
12531808660	6
12531942030	6
12532008660	6
12532408360	6
12532713930	6
12532909860	6
12532939030	6
12533413930	6
12533913930	6
12534813930	6
12535008360	6
12535320560	6
12536308560	6
12537608660	6
12537813930	6
12538108660	6
12538308360	6
13000708261	4
13001603731	4
13001606211	4
13001606434	4
13030508361	4
13030808360	4
13034108260	4
13071108260	4
13071508260	4
13101621060	16
13103208360	4
13120519831	16
13131406320	16
13160009861	16
13192502310	17, 18
13201008260	16
13201108260	16
13201508260	16
13201608260	16
13202108260	16
13211502960	16
14551006210	7
14580008260	7
14581008260	7
14586206720	7
14586604261	7
14587408261	7
15111204630	9
15611106160	9
15660109861	9
15680006161	9
15901010230	9
15901103432	9
15901203433	9
15912908261	9
16200721161	12
16200721260	17, 18
16200721601	12
16202108260	9
16202321061	12, 13
17720008260	8
17720206210	8
17721440630	8
17721511120	8
17721840630	8
17722011120	8
17722611120	8
17722742030	8
17722801110	8
17723440630	8
17723640630	8
17800121060	12, 13
17801621060	12, 13
17801621160	12, 13
17807608360	4
17808208260	12, 13
17810108260	14, 15
17812143230	16
17812703460	16
17812921060	12, 13
17816021060	12, 13
17816521060	12, 13
20000508261	14, 15
20010508260	14, 15
20011108265	15
21000103462	11
21001308360	11
21001503460	11
21002303461	11
21040000660	4
21200507560	11
30001008360	17, 18
30001208260	17, 18
30003208360	17, 18
30010508260	17, 18
30021700610	17, 18
30033306160	17, 18
30061408260	17, 18
30101608260	17, 18
30291421060	17, 18
35101008260	14, 15
35111008260	14, 15
43261721060	12, 13
60403021060	12, 13
69402921060	12, 13
69911804560	12, 13
70101721061	12, 13
70116021260	17, 18
70116121260	17, 18
88900008262	20
88995021060	12, 13
89011221160	19
89011521160	19
89011804262	11
89011849330	19
89015808260	19
89015808261	4, 19
89016009461	19
90003010008	12, 13
90010006045	11
90010505060	14, 15
90010506020	7
90016205018	14
90016205020	7, 14, 15
90016205022	10
90016205025	4
90016205032	14, 15
90016205040	10
90016304018	8
90020905020	16, 17, 18
90022005050	4
90023804010	7
90023805010	4, 14, 15
90023805018	9, 15
90023805025	4, 14, 15
90023805045	14, 15
90024205057	4
90024603012	14, 15
90025305016	14, 15, 17, 18
90025305030	14, 15
90032303014	9
90034530025	4
90050000006	12, 13
90050100010	9
90051600005	4, 14, 15, 16, 17, 18
90052500006	11
90056000004	12, 13
90060000006	11
90060200005	14, 15
90060200010	9
90060300006	4
90060500010	9
90067	4, 9, 16, 20
90067C	4, 9, 16, 20
90070000004	8
90081036202	10
9154005014	4, 17, 18
99944500071	9
99988800801	4
A052000042	8
A190000102	15
A221000000	4
A244000020	4
A350000711	16
A358000000	16
C453000020	12, 13
C471000030	12, 13
C471000040	12, 13
E160000061	11
P005000980	6
P021000251	17
P021000380	14
P021001760	17, 18
P021014450	4
P022002100	8
P022003120	8
P022003130	8
SB1020	10
V103000000	4
V401000001	18
V471000770	16
V485000060	13
V485000070	13
V490001230	16
V491000220	4
V495000430	11
X505002310	19